PEGLER

Valve technology

Pegler Valve

EN export catalogue

aalberts integrated piping systems

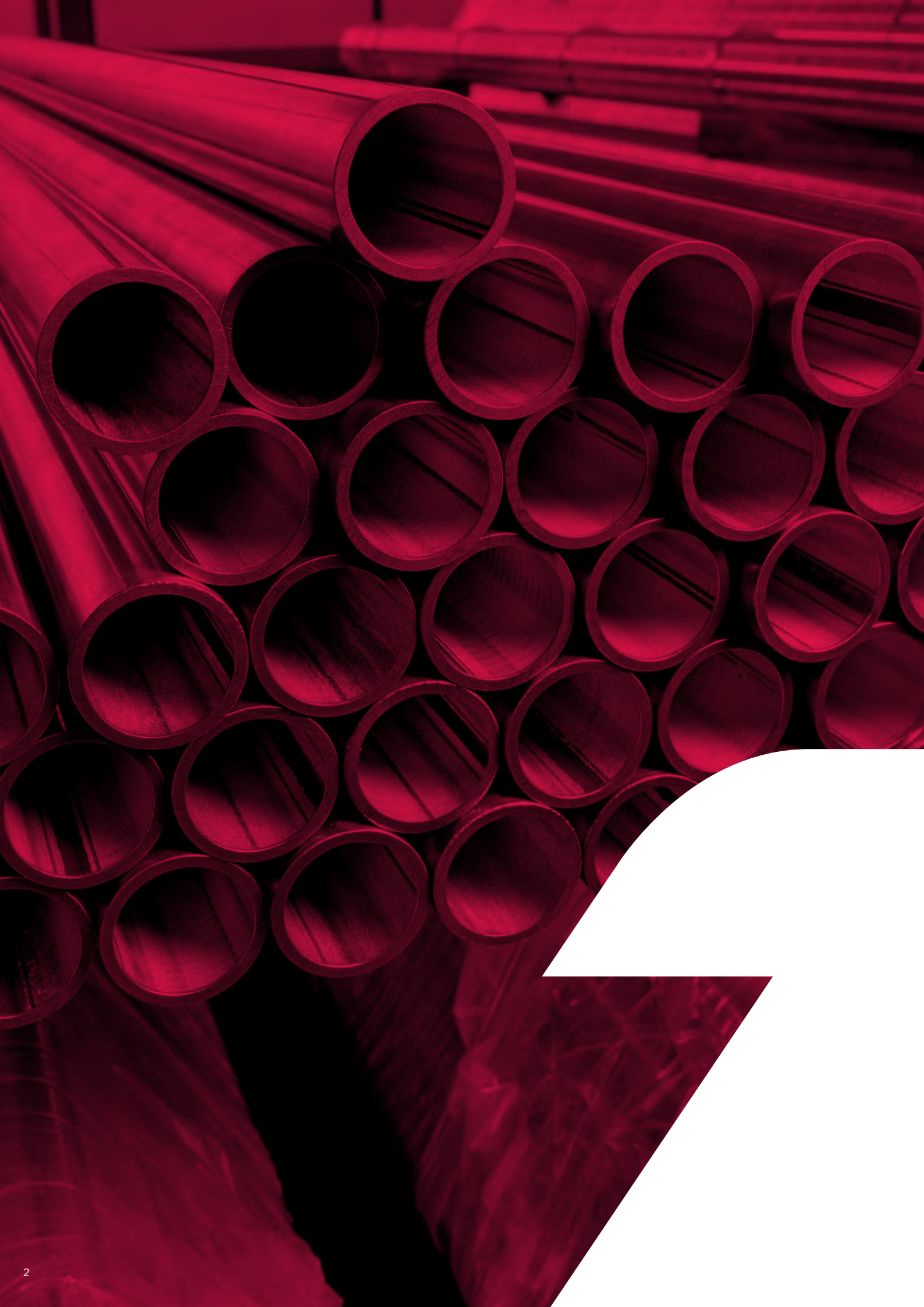

contents

Aalberts integrated piping systems	4 - 5
Pegler	6 - 7
gate valves by Pegler	9 - 16
ball valves by Pegler	17 - 30
butterfly valves by Pegler	31 - 36
check and strainer valves by Pegler	37 - 52
pressure reducing valves by Pegler	53 - 56
commissioning valves by Pegler	57 - 64
globe valves by Pegler	65 - 68
Prestex plumbing valves by Pegler	69 - 104
additional information	105 - 117

don’t just buy products, buy solutions.

Aalberts Integrated Piping Systems

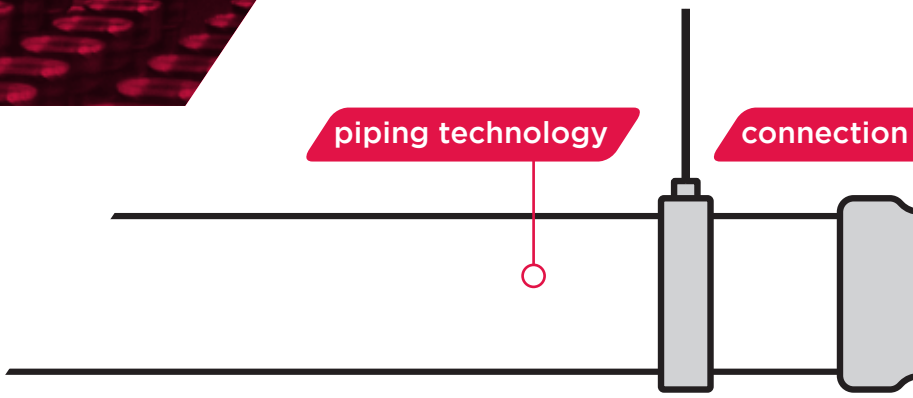

Aalberts Integrated Piping Systems develops and produces connectors, metal and plastic pipes, valves, and fastening technology for the distribution and control of liquids and gases. Our technologies enable customers to work quickly and reliably in a simple and efficient way.

integrated piping systems

These bespoke systems are applicable for key vertical markets such as residential, commercial, industrial and utility. Our complete range of integrated piping systems and fittings is always available through a wide range of various distribution channels. Furthermore, our own engineers are always developing our existing systems and services to the next level, as well as the design of completely new and innovative solutions.
This is how Aalberts Integrated Piping Systems enables its customers to make every project a success.

global footprint with a local presence

We are part of Aalberts, a globally operating technology group and currently active at 30 locations in 14 countries, offering the broadest and most advanced portfolio. At Aalberts Integrated Piping Systems, we combine an overall technical expertise, global knowledge exchange, and the continuous drive to innovate within our group, with our knowledge of local markets and involvement in our customers' business. We offer them advice, Design Service and complete customised solutions from the design phase right through to delivery and aftercare, via our Aalberts Integrated Piping Systems Design Service®.
We take away all our customers worries and concerns and offer them a complete integrated piping solution, each and every time.

exceeding expectations

At Aalberts Integrated Piping Systems we not only invest in our customers, but also in our own employees. Because we realise that they are the heart of our company. With passion, teamwork, ownership and diversity, we have the ability to think 'out-of-the-box'. This means that we define answers on challenging market demands and invent a range of appropriate solutions. Our people are also constantly focused on achieving optimum performances and continuous innovation.
It is this dedication that enables us to exceed both ourselves and our customers' expectations.

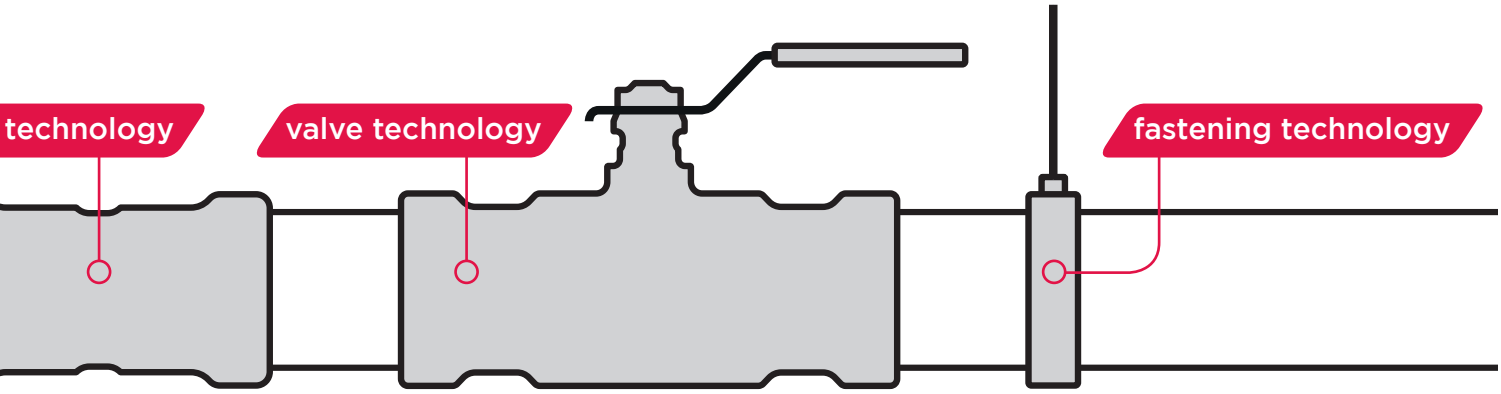

our internationally strong brands and technologies

Aalberts Integrated Piping Systems does not simply focus on only one technology within the system, but applies different technologies for different applications. All these technologies employ strong brands and together they constitute what we call our integrated piping systems. Our systems are easy to specify, install and maintain.

- **valve technology.** Thanks to the internationally renowned brands Apollo and Pegler, Aalberts Integrated Piping Systems can offer the best valves for a wide range of market segments. Naturally these valves are high quality and distributed worldwide.
- **connection technology.** With the high-quality solutions from VSH, Aalberts Integrated Piping Systems is a market leader in connection technology. The wide range of solutions is suitable for numerous applications in residential, commercial and industrial buildings, general industrial usage, fire protection and shipbuilding.
- **piping technology.** Piping technology includes a complete range of carbon steel, stainless steel and plastic tubes in sizes ranging from 12 mm to 108 mm.
- **fastening technology.** Smart hangers for the optimal arrangement of the integrated piping system

Pegler

Pegler provides the best solutions for integrated piping systems. This term encompasses a range of product lines for connection technology and valve technology which, together with our design service, offer the ultimate solution for top-quality integrated piping systems.

VSH PowerPress®

material	carbon steel
suitable for	thick walled steel
connection	press / DW-profile
dimensions	1/2" - 2" (DN15 – DN50)

VSH Shurjoint

material	ductile iron / stainless steel
suitable for	thick walled steel / stainless steel / HDPE
connection	groove
dimensions	1/2" - 104" (DN15 – DN2600)

the strength of Pegler

- the perfect solution for every project
- smart, fast and efficient installation
- Aalberts Integrated Piping Systems Design Service
- valuable advice from the drawing board to delivery
- a very wide product range
- warranty plus
- all products are BIM now

The integrated piping systems stand out due to their high and consistent quality, and quick and simple installation and maintenance. Pegler offers the widest, most comprehensive range of reliable press, compression, groove and push systems – including fittings for thick-walled and thin-walled metal and plastic tubes.

Aalberts Integrated Piping Systems Design Service®

Pegler is a fully customer-focused sales and service organisation with experts who are committed to product development, service and customer support every single day. This means that from day one at the digital drawing board, you will receive professional advice on customised total solutions while being able to rely on optimum availability and reliable support both during and after delivery. Our engineers have access to all Aalberts Integrated Piping Systems products and can therefore always find the best solution which is fully customised to your needs.

VSH XPress

material	carbon steel / stainless steel / copper
suitable for	thin walled / carbon steel / stainless steel / copper
connection	press / M-profile
dimensions	12 – 108 mm (DN10 – DN100)

VSH MultiPress

material	PPSU / brass
suitable for	Multilayer tube
connection	press / U & TH profile
dimensions	14 – 63 mm (DN10 – DN50)

VSH Tectite

material	brass / stainless steel / copper
suitable for	thin walled stainless steel / copper / carbon steel / PEX, PB and Multilayer tube
connection	push
dimensions	10 – 54 mm (DN8 – DN50)

Pegler Valve Technology

Pegler is well known and respected as one of the leading manufacturers of advanced plumbing, heating and engineering products in the world. It's a reputation earned through a total dedication to quality, innovation and customer service that's been the hallmark of the company since it was established in the 1890's (originally trading as Pegler Ltd and Yorkshire Fittings Ltd).

Our success has been derived from a commitment to a philosophy based on quality, service, investment, competitiveness and innovation. Energy and water conservation is very much at the forefront of our product development. Pegler's unique Integrated Piping System brings together valves, fitting and pipes in one complete pipe-work system, with an emphasis on delivering heat free jointing.

Integrated Piping System combines the best elements of modern connection and valve technology, with international quality approvals and cost effective solutions for every project.

As a business partner to some of the world's best known plumbing and heating suppliers, our unrivalled list of market leading product brands include Yorkshire integral solder ring fittings, Pegler Terrier radiator valves, VSH Tectite push fit fittings, VSH PowerPress® products, VSH Shurjoint solutions, the VSH XPress press fit system, Pegler valves, Prestex general brassware, Endex end feed and Kuterlite compression fittings.

don't just buy products,
buy solutions.

Pegler valve

gate valves

1065 Gate valve (2 x female thread)

water oil

specification

- all sizes rated PN16
- non-rising stem
- "O" ring gland packing seal
- ½" to 2" sizes
- solid wedge
- forged brass body
- ISO7-1Rc taper thread
- ANSI (NPT) American taper thread (AT)
- BS2779 parallel thread (PT)

DN	Connection	ISO7-1 Rc (taper)	ANSI (NTP) (taper)	ISO 288 (PT)	Total (kg)	Cv	Kv
DN15	½"	202007	202042	202052	0.27	16.4	14.0
DN20	¾"	202008	202043	202053	0.37	37.4	32.0
DN25	1"	202009	202044	202054	0.58	66.7	57.0
DN32	1 ¼"	202010	202045	202055	0.94	105.3	105.3
DN40	1 ½"	202011	202046	202056	1.19	150.9	150.9
DN50	2"	202012	202047	202057	2.09	269.1	269.1

*Cv - flow rate in US GPM at a pressure drop of 1 psi.
*Kv - flow rate in m3 per hour at a pressure drop of 1 bar.

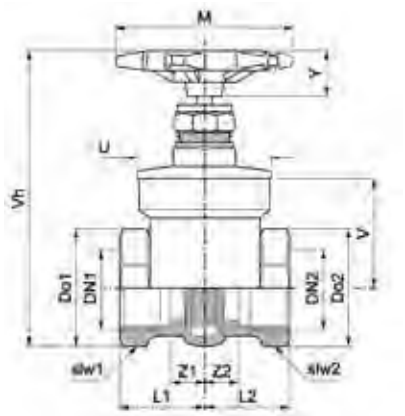

Dimensions (mm)

	Do1/Do2	DN1/DN2	L1/L2	M	slw1	slw2	slw3	U	V	Vh	Y	Z1/Z2
DN15	31.0	½"	23.0	55.0	31.0	20.0	31.0	26.0	29.0	86.0	15.0	14.0
DN20	38.0	¾"	24.0	55.0	38.0	20.0	38.0	33.0	34.0	99.0	16.0	14.0
DN25	46.0	1"	29.0	64.0	46.0	21.0	46.0	41.0	41.0	118.0	19.0	18.0
DN32	59.0	1 ¼"	32.0	77.0	59.0	26.0	59.0	49.0	57.0	144.0	19.0	19.0
DN40	65.0	1 ½"	35.0	86.0	65.0	26.0	65.0	55.0	65.0	158.0	20.0	21.0
DN50	80.0	2"	43.0	95.0	80.0	31.0	80.0	67.0	88.0	195.0	25.0	22.0

Material specification

Nr	Component	Material
1	Body	Forged brass (½" to 2")
2	Bonnet	Forged brass (½" to 2")
3	Stem	Brass bar
4	Wedge	Forged brass (½" to 2)
5	Gland nut	Brass bar (½" to 1") Forged brass (1 ¼" to 2")
6	Handwheel	Aluminium
7	Handwheel nut	Brass bar
8	"O" ring	FPM
9	Rating disc	Aluminium

Maximum pressure conditions

Size	Max Pressure (bar)	Min/Max Temperature (°C)	Test Pressure Shell (bar)	Test Pressure Seat (bar)	Max Pressure (psi)	Min/Max Temperature (°F)	Test Pressure Shell (psi)	Test Pressure Seat (psi)
¼" to 2"	17.5	- 10°C + 93°C	26.3	19.3	253.8	14°F + 199.4°F	381.5	279.5

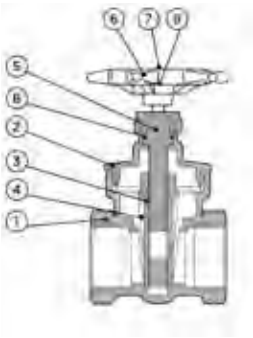

Pressure equipment directive category

All sizes classified SEP

Pressure & temperature ratings

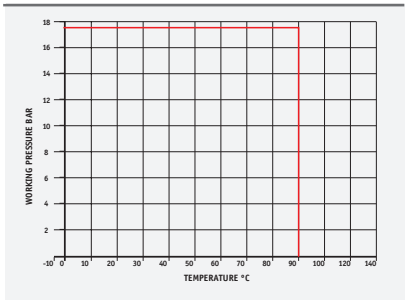

steam water oil

1068 Gate valve (2 x female thread)

specification

- BS5154 PN20 series B
- non-rising stem
- high quality lubricated packing
- ½" to 4" sizes
- solid brass wedge
- can be re-packed under pressure
- forged brass body
- ISO7-1Rc taper thread BS EN 10226
- ANSI (NPT) American taper thread (AT)
- BS2779 parallel thread (PT)

DN	Connection	ISO7-1 Rc (taper)	ANSI (NTP) (taper)	ISO 288 (PT)	ISO7-Rc) Lockshield)	Total (kg)	Cv	Kv
DN15•	½"	203007	203027	203047	203067	0.32	14.0	14.0
DN20•	¾"	203008	203028	203048	203068	0.45	32.0	32.0
DN25•	1"	203009	203029	203049	203069	0.74	57.0	57.0
DN32•	1 ¼"	203010	203030	203050	203070	1.08	90.0	90.0
DN40•	1 ½"	203011	203031	203051	203071	1.38	129.0	129.0
DN50•	2"	203012	203032	203052	203072	2.34	230.0	230.0
DN65	2 ½"	203013	203033	203053		3.54	428.0	428.0
DN80	3"	203014	203034	203054		4.96	680.0	680.0
DN100	4"	203015	203035	203055		8.66	1088.0	1088.0

*Cv - flow rate in US GPM at a pressure drop of 1 psi.
*Kv - flow rate in m3 per hour at a pressure drop of 1 bar.
•WRAS approved

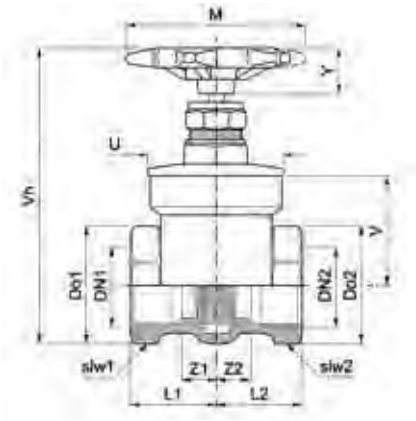

Dimensions (mm)

	Do1/Do2	DN1/DN2	L1/L2	M	slw1	slw2	slw3	U	V	Vh	Y	Z1/Z2
DN15	34.0	½"	26.0	62.0	29.0	15.0	29.0	38.0	66.0	102.0	11.0	16.0
DN20	40.0	¾"	28.0	67.0	35.0	17.0	35.0	43.0	72.0	115.0	12.0	17.0
DN25	46.0	1"	33.0	78.0	40.0	20.0	40.0	50.0	82.0	133.0	14.0	20.0
DN32	55.0	1 ¼"	37.0	87.0	48.0	24.0	48.0	58.0	92.0	153.0	16.0	22.0
DN40	65.0	1 ½"	38.0	91.0	56.0	60.0	56.0	66.0	101.0	178.0	18.0	23.0
DN50	78.0	2"	45.0	108.0	67.0	28.0	67.0	78.0	117.0	209.0	20.0	27.0
DN65	96.0	2 ½"	51.0	122.0	83.0	34.0	83.0	95.0	137.0	253.0	20.0	31.0
DN80	115.0	3"	57.0	136.0	100.0	42.0	100.0	111.0	156.0	298.0	20.0	34.0
DN100	140.0	4"	67.0	160.0	121.0	50.0	121.0	134.0	185.0	360.0	20.0	40.0

Material specification

Nr	Component	Material
1	Body	Forged brass (½" to 2") Gravity die cast brass (2 ½" to 4")
2	Bonnet	Forged brass (½" to 3") Gravity die cast brass (4")
3	Stem	Brass bar
4	Wedge	Forged brass (½" to 2 ½") Gravity die cast brass (3" to 4")
5	Gland nut	Brass bar (½" to 1") Forged brass (1 ¼" to 4")
6	Handwheel	Aluminium
7	Handwheel nut	Brass bar
8	Gland packing	PTFE
9	Rating disc	Aluminium

Maximum pressure conditions

Size	Max Pressure (bar)	Min/Max Temperature (°C)	Test Pressure Shell (bar)	Test Pressure Seat (bar)	Max Pressure (psi)	Min/Max Temperature (°F)	Test Pressure Shell (psi)	Test Pressure Seat (psi)
½" to 4"	20.0	- 10°C + 180°C	30.0	22.0	253.8	14°F + 356°F	435.1	319.1

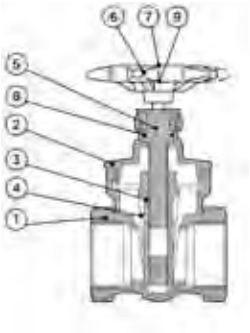

Pressure equipment directive category

All sizes classified SEP

Pressure & temperature ratings

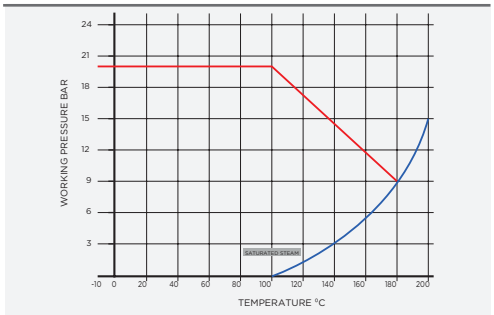

1070/125 Gate valve (2 x female thread)

steam water oil

specification

- BS5154 PN20 series B
- non-rising stem
- high quality lubricated packing
- ½" to 4" sizes
- bronze (gunmetal) wedge
- can be re-packed under pressure
- bronze (gunmetal) body
- ISO7-1Rc taper thread BS EN 10226
- ANSI (NPT) American taper thread (AT)
- BS2779 parallel thread (PT)

DN	Connection	ISO7-1 Rc (taper)	ANSI (NTP) (taper)	ISO7-Rc (Lockshield)	Total (kg)	Cv	Kv
DN15	½"	103007	103047	103057	0.32	16.4	14.0
DN20	¾"	103008	103048	103058	0.46	37.4	32.0
DN25	1"	103009	103049	103059	0.69	66.7	57.0
DN32	1 ¼"	103010	103050	103060	1.03	105.3	90.0
DN40	1 ½"	103011	103051	103061	1.40	150.9	129.0
DN50	2"	103012	103052	103062	2.28	209.1	230.0
DN65	2 ½"	103013	103053		3.68	500.8	428.0
DN80	3"	103014	103054		5.42	795.6	680.0
DN100	4"	103015	103055		10.59	1273.0	1088.0

*Cv - flow rate in US GPM at a pressure drop of 1 psi.
*Kv - flow rate in m3 per hour at a pressure drop of 1 bar.

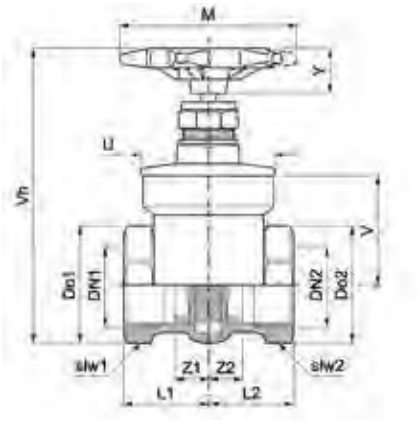

Dimensions (mm)

	Do1/D02	DN1/DN2	L1/L2	M	slw1	slw2	slw3	U	V	Vh	Y	Z1/Z2
DN15	34.0	½"	26.0	62.0	29.0	15.0	29.0	38.0	66.0	102.0	11.0	16.0
DN20	40.0	¾"	28.0	67.0	35.0	17.0	35.0	43.0	72.0	115.0	12.0	17.0
DN25	46.0	1"	33.0	78.0	40.0	20.0	40.0	50.0	82.0	133.0	14.0	20.0
DN32	55.0	1 ¼"	37.0	87.0	48.0	24.0	48.0	58.0	92.0	153.0	16.0	22.0
DN40	65.0	1 ½"	38.0	91.0	56.0	28.0	56.0	66.0	101.0	178.0	18.0	23.0
DN50	78.0	2"	45.0	108.0	67.0	34.0	67.0	78.0	117.0	209.0	20.0	27.0
DN65	96.0	2 ½"	51.0	122.0	83.0	42.0	83.0	95.0	137.0	253.0	20.0	31.0
DN80	115.0	3"	57.0	136.0	100.0	50.0	100.0	111.0	156.0	298.0	20.0	34.0
DN100	140.0	4"	67.0	160.0	121.0	61.0	121.0	134.0	185.0	360.0	20.0	40.0

Material specification

Nr	Component	Material
1	Body	Bronze (Gunmetal)
2	Bonnet	DZR brass
3	Stem	Brass bar
4	Wedge	DZR brass
5	Gland nut	Brass bar (½" to 1") Forged brass (1 ¼" to 4")
6	Handwheel	Aluminium
7	Handwheel nut	Brass bar
8	Gland packing	EPDM
9	Rating disc	Aluminium

Maximum pressure conditions

Size	Max Pressure (bar)	Min/Max Temperature (°C)	Test Pressure Shell (bar)	Test Pressure Seat (bar)	Max Pressure (psi)	Min/Max Temperature (°F)	Test Pressure Shell (psi)	Test Pressure Seat (psi)
½" to 4"	20.0	- 10°C + 180°C	30.0	22.0	290.1	14°F + 356°F	435.1	319.1

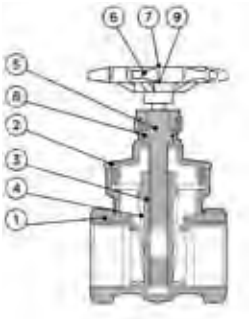

Pressure equipment directive category

All sizes classified SEP

Pressure & temperature ratings

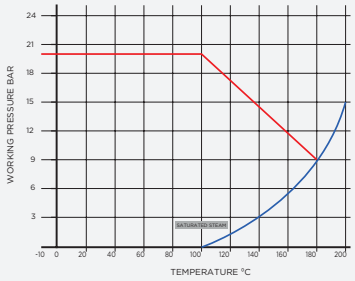

steam water oil

10751/10751LS Gate valve (2 x female thread)

specification

- BS5154 PN20 series B
- non-rising stem
- high quality lubricated packing
- ½" to 3" sizes
- solid gunmetal wedge
- can be re-packed under pressure
- bronze (gunmetal) body
- ISO7-1Rc taper thread BS EN 10226
- ANSI (NPT) American taper thread (AT)
- BS2779 parallel thread (PT)
- BS21 taper thread
- all sizes PN20

DN	Connection	ISO7-1 Rc (taper)	ISO7-1Rc (Lockshield -Taper)	ISO 288 (PT)* (red handle)	ISO 288 (PT)* (blue handle)	ISO 228 (PT) LS*	Total (kg)	Cv	Kv
DN15	½"	101050	101060	10110	101070	101078	0.26	16.4	14.0
DN20	¾"	101051	101061	10111	101071	101079	0.35	37.4	32.0
DN25	1"	101052	101062	10112	101072	101080	0.52	66.7	57.0
DN32	1 ¼"	101053	101063	10113	101073	101081	0.77	105.3	90.0
DN40	1 ½"	101054	101064	10114	101074	101082	1.07	150.9	129.0
DN50	2"	101055	101065	10115	101075	101083	1.62	269.1	230.0
DN65	2 ½"	101056		10116	101076		3.00	500.8	428.0
DN80	3"	101057		10117	101077		4.82	759.6	680.0

*Cv - flow rate in US GPM at a pressure drop of 1 psi.
*Kv - flow rate in m3 per hour at a pressure drop of 1 bar.

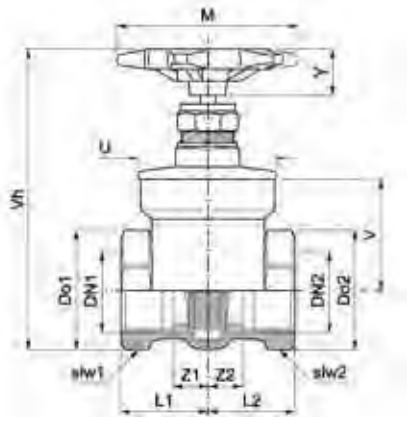

Dimensions (mm)

	Do1/D02	DN1/DN2	L1/L2	M	slw1/ slw3	slw2	U	V	Vh	Y	Z1/Z2
DN15	27.0	½"	22.0	53.0	27.0	15.0	32.0	58.0	53.0	12.0	10.0
DN20	32.0	¾"	25.0	53.0	32.0	17.0	38.0	72.0	53.0	12.0	11.0
DN25	40.0	1"	27.0	65.0	40.0	20.0	43.0	81.0	65.0	16.0	12.0
DN32	50.0	1 ¼"	31.0	71.0	50.0	24.0	50.0	92.0	71.0	16.0	14.0
DN40	56.0	1 ½"	33.0	89.0	56.0	28.0	56.0	106.0	89.0	20.0	15.0
DN50	68.0	2"	38.0	89.0	68.0	34.0	70.0	122.0	89.0	22.0	17.0
DN65	96.0	2 ½"	44.0	122.0	83.0	42.0	95.0	137.0	253.0	20.0	31.0
DN80	115.0	3"	53.0	136.0	100.0	50.0	111.0	156.0	298.0	20.0	34.0

Material specification

Nr	Component	Material
1	Body	Bronze (Gunmetal)
2	Bonnet	Bronze (Gunmetal))
3	Stem	Brass bar
4	Wedge	Bronze (Gunmetal))
5	Gland nut	Brass bar (½" to 1") Forged brass (1 ¼" to 3")
6	Handwheel	Aluminium
7	Handwheel nut	Brass bar
8	Gland ring	Brass bar
9	Rating disc	Aluminium

Maximum pressure conditions

Size	Max Pressure (bar)	Min/Max Temperature (°C)	Test Pressure Shell (bar)	Test Pressure Seat (bar)	Max Pressure (psi)	Min/Max Temperature (°F)	Test Pressure Shell (psi)	Test Pressure Seat (psi)
½" to 3"	20.0	- 10°C + 180°C	30.0	22.0	290.1	14°F + 356°F	435.1	319.1

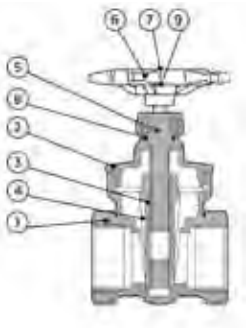

Pressure equipment directive category

All sizes classified SEP

Pressure & temperature ratings

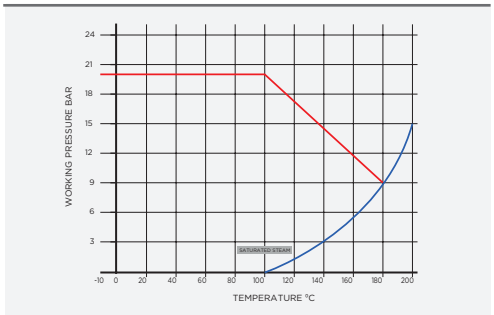

V850 Gate valve

heating water

specification

- BS EN 1171:2002
- flanged to EN1092-2
- PN16 all sizes
- ductile iron gate valve
- bronze (gunmetal) seat and trim
- stainless steel stem
- non-rising
- ductile iron body

DN	Connection	Code	Total (kg)	Cv	Kv
DN50	2″	112150	13.0	269.10	230.0
DN65	2 ½″	112151	17.0	421.20	360.0
DN80	3″	112152	19.0	607.23	519.0
DN100	4″	112153	25.0	1079.91	923.0
DN125	5″	112154	34.0	1699.31	1443.0
DN150	6″	112155	40.0	2430.09	2077.0
DN200	8″	112156	68.0	4320.81	3693.0
DN250	10″	112157	101.0	6752.07	5771.0
DN300	12″	112158	137.0	9722.70	8310.0

*Cv - flow rate in US GPM at a pressure drop of 1 psi.
*Kv - flow rate in m3 per hour at a pressure drop of 1 bar.

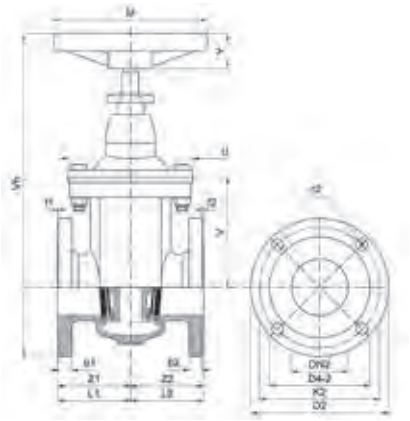

Dimensions (mm)

	b1/b2	d2-1/d2-2	d4-1/d4-2	D1/D2	Do1/D02	DN1/DN2	f1/f2	k1/k2	L1/L2	M	n1/n2	U	V	Vh	Y	Z1/Z2
DN50	19.0	19.0	60.0	165.0	60.0	2″	3.0	95.0	85.0	159.0	4.0	96.0	151.0	276.0	42.0	85.0
DN65	19.0	19.0	76.0	180.0	76.0	2 ½″	3.0	106.0	93.0	200.0	4.0	100.0	175.0	311.0	46.0	93.0
DN80	19.0	19.0	88.0	200.0	88.0	3″	3.0	122.0	100.0	200.0	4.0	112.0	209.0	358.0	48.0	100.0
DN100	19.0	20.0	114.0	215.0	114.0	4″	3.0	138.0	115.0	200.0	4.0	120.0	243.0	403.0	52.0	115.0
DN125	19.0	20.0	139.0	250.0	139.0	5″	3.0	188.0	120.0	250.0	4.0	125.0	280.0	465.0	59.0	120.0
DN150	10.0	20.0	168.0	285.0	168.0	6″	3.0	206.0	135.0	250.0	4.0	130.0	326.0	524.0	59.0	135.0
DN200	20.0	21.0	219.0	350.0	219.0	8″	3.0	281.0	148.0	320.0	4.0	160.0	431.0	665.0	59.0	148.0
DN250	22.0	21.0	273.0	400.0	273.0	10″	3.0	330.0	168.0	370.0	4.0	170.0	504.0	763.0	59.0	168.0
DN300	24.0	22.0	323.0	456.0	323.0	12″	3.0	368.0	178.0	390.0	4.0	190.0	565.0	866.0	73.0	178.0

Material specification

Nr	Component	Material
1	Body	Ductile iron
2	Body seat ring	Bronze (Gunmetal))
3	Bonnet	Ductile iron
4	Bonnet bush	Brass
5	Bonnet gasket	EPDM
6	Stem	Stainless steel
7	Stem nut	Brass
8	Wedge	Ductile iron / EPDM
9	Wedge seat ring	Bronze (Gunmetal))
10	Wedge trim	Bronze (Gunmetal))
11	Wedge nut	Bronze (Gunmetal))
12	Gland follower	Ductile iron
13	Gland	Ductile iron
14	Gland packing	Graphite non-asbestos
15	Stuffing box	Ductile iron
16	Stuffing box gasket	Compressed graphite
17	Handwheel	Cast iron
18	Bolt	Steel
19	Nut	Steel

Maximum pressure conditions

Size	Max Pressure (bar)	Min/Max Temperature (°C)	Test Pressure Shell (bar)	Test Pressure Seat (bar)	Max Pressure (psi)	Min/Max Temperature (°F)	Test Pressure Shell (psi)	Test Pressure Seat (psi)
DN50 to DN300	16.0	- 10°C + 180°C	24.0	17.6	232.1	14°F + 356°F	348.1	255.3

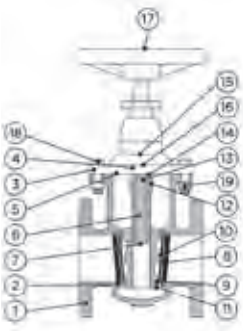

Pressure equipment directive category

All sizes classified SEP

V850 PN16 Ductile Iron gate valve with EPDM coated Ductile iron wedge.
The body and internals are epoxy painted and make this suitable for use with potable/ drinking water.

WRAS Approved Certificate Number: 1311090

V950 Gate valve

specification

- all sizes rated PN16
- BS EN 1171:2002
- flanged to EN1092-2 PN16
- ductile iron gate valve
- bronze (gunmetal) seat and trim
- stainless steel stem
- non-rising
- ductile iron body

DN	Connection	Code	Total (kg)	Cv	Kv
DN50	2″	15510	12.0	269.10	230.0
DN65	2 ½″	15511	16.9	421.20	360.0
DN80	3″	15512	19.1	607.23	519.0
DN100	4″	15513	26.6	1079.91	923.0
DN125	5″	15514	37.9	1688.31	1443.0
DN150	6″	15515	47.4	2430.09	2077.0
DN200	8″	15516	73.9	4320.81	3693.0
DN250	10″	15517	122.0	6752.07	5771.0
DN300	12″	15518	171.0	9722.70	8310.0

*Cv - flow rate in US GPM at a pressure drop of 1 psi.
*Kv - flow rate in m3 per hour at a pressure drop of 1 bar.

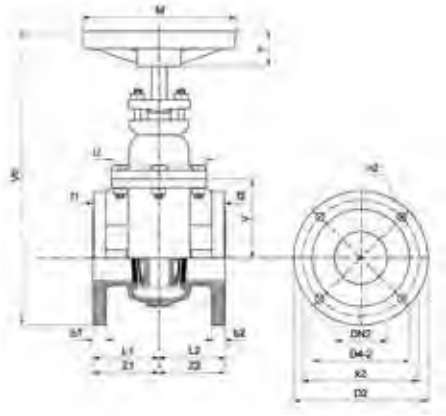

Dimensions (mm)

	b1/b2	d2-1/d2-2	d4-1/d4-2	D1/D2	Do1/D02	DN1/DN2	f1/f2	k1/k2	L1/L2	M	n1/n2	U	V	Vh	Y	Z1/Z2
DN50	19.0	19.0	99.0	165.0	60.0	2″	3.0	95.0	89.0	180.0	4.0	114.0	209.0	323.0	30.0	89.0
DN65	19.0	19.0	76.0	118.0	76.0	2 ½″	3.0	106.0	95.0	180.0	4.0	122.0	234.0	358.0	30.0	95.0
DN80	19.0	19.0	88.0	200.0	132.0	3″	3.0	122.0	101.0	200.0	4.0	130.0	292.0	423.0	30.0	101.0
DN100	19.0	20.0	114.0	215.0	156.0	4″	3.0	138.0	114.0	250.0	4.0	141.0	334.0	475.0	30.0	114.0
DN125	19.0	20.0	139.0	250.0	184.0	5″	3.0	188.0	127.0	280.0	4.0	154.0	382.0	538.0	30.0	127.0
DN150	10.0	20.0	168.0	285.0	211.0	6″	3.0	206.0	133.0	300.0	4.0	167.0	446.0	620.0	30.0	133.0
DN200	20.0	21.0	219.0	350.0	266.0	8″	3.0	281.0	146.0	360.0	4.0	192.0	553.0	755.0	32.0	146.0
DN250	22.0	21.0	273.0	400.0	319.0	10″	3.0	330.0	165.0	360.0	4.0	218.0	675.0	910.0	34.0	165.0
DN300	24.0	22.0	323.0	456.0	370.0	12″	3.0	368.0	178.0	410.0	4.0	243.0	52.0	1017.0	37.0	178.0

Material specification

Nr	Component	Material
1	Body	Ductile iron
2	Body seat ring	Bronze (Gunmetal))
3	Bonnet	Ductile iron
4	Bonnet bush	Brass
5	Bonnet gasket	Graphite non-asbestos
6	Stem	Stainless steel
7	Stem nut	Brass
8	Wedge	Ductile iron
9	Wedge seat ring	Bronze (Gunmetal))
10	Wedge trim	Bronze (Gunmetal))
11	Wedge nut	Bronze (Gunmetal))
12	Gland follower	Ductile iron
13	Gland	Ductile iron
14	Gland packing	Graphite non-asbestos
15	Stuffing box	Ductile iron
16	Stuffing box gasket	Compressed graphite
17	Handwheel	Cast iron
18	Bolt	Steel
19	Nut	Steel

Maximum pressure conditions

Size	Max Pressure (bar)	Min/Max Temperature (°C)	Test Pressure Shell (bar)	Test Pressure Seat (bar)	Max Pressure (psi)	Min/Max Temperature (°F)	Test Pressure Shell (psi)	Test Pressure Seat (psi)
DN50 to DN300	16.0	- 10°C + 180°C	24.0	17.6	232.1	14°F + 356°F	348.1	255.3

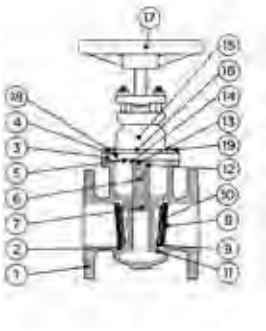

Pressure equipment directive category

All sizes classified SEP

63 Gate valve

specification

- all sizes rated PN16
- non-rising stem
- solid wedge
- compression ends
- high quality lubricated packing
- can be re-packed under pressure
- all sizes available with lockshield
- brass body (15mm to 35mm)
- bronze (gunmetal) body (42mm to 54mm)
- Prestex compression ends to EN1254/2 (formerly BS864/2)
- lockshield pattern LS

DN	Connection	Code	Lockshield	Total (kg)	LS weight (kg)	Cv	Kv
DN15	15mm	506007	506037	0.31	0.31	16.4	14.0
DN20	22mm	506008	506038	0.47	0.47	37.4	32.0
DN25	28mm	506009	506039	0.65	0.65	66.7	57.0
DN32	35mm	506010		1.26		105.3	90.0
DN40	42mm	507011		1.60		150.9	129.0
DN50	54mm	507012		2.70		269.1	230.0

*Cv - flow rate in US GPM at a pressure drop of 1 psi.
*Kv - flow rate in m3 per hour at a pressure drop of 1 bar.

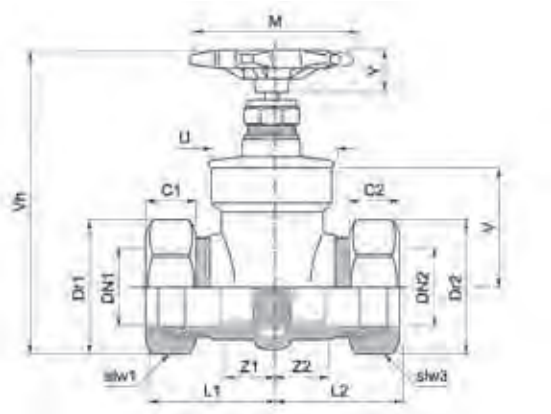

Dimensions (mm)

	C1/C2	DN1/DN2	Dr1	L1/L2	M	slw1/slw3	slw2	U	V	Vh	Y	Z1/Z2
DN15	14.0	DN15	26.0	35.0	57.0	24.0	17.0	31.0	62.0	96.0	13.0	21.0
DN22	17.0	DN22	34.0	39.0	57.0	31.0	17.0	39.0	74.0	110.0	11.0	22.0
DN28	19.0	DN28	43.0	46.0	67.0	40.0	19.0	47.0	85.0	133.0	18.0	27.0
DN35	20.0	DN35	53.0	54.0	73.0	49.0	21.0	56.0	93.0	151.0	23.0	34.0
DN42	20.0	DN42	62.0	56.0	93.0	57.0	25.0	64.0	109.0	177.0	23.0	37.0
DN54	25.0	DN54	78.0	67.0	105.0	72.0	28.0	80.0	130.0	213.0	29.0	42.0

Material specification

Nr	Component	Material
1	Body	Brass 15 - 35, Bronze (Gunmetal)) 42 - 54
2	Bonnet	Brass
3	Stem	Brass
4	Wedge	Brass
5	Stem ring	Brass
6	Gland	Brass
7	Gland nut	Brass
8	Handwheel	Aluminium
9	Handwheel nut	Brass bar
10	Gland packing	P.T.F.E.
11	Rating disc	Aluminium
12	Lockshield	Brass

Maximum pressure conditions

Size	Max Pressure (bar)	Min/Max Temperature (°C)	Test Pressure Shell (bar)	Test Pressure Seat (bar)	Max Pressure (psi)	Min/Max Temperature (°F)	Test Pressure Shell (psi)	Test Pressure Seat (psi)
15 to 54mm	16.0	- 10°C + 120°C	24.0	17.5	232.1	14°F + 248°F	348.1	253.8

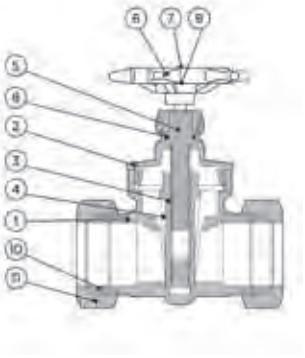

Pressure equipment directive category

All sizes classified SEP

Pressure & temperature ratings

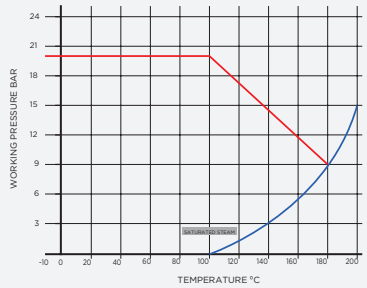

Pegler valve

ball valves

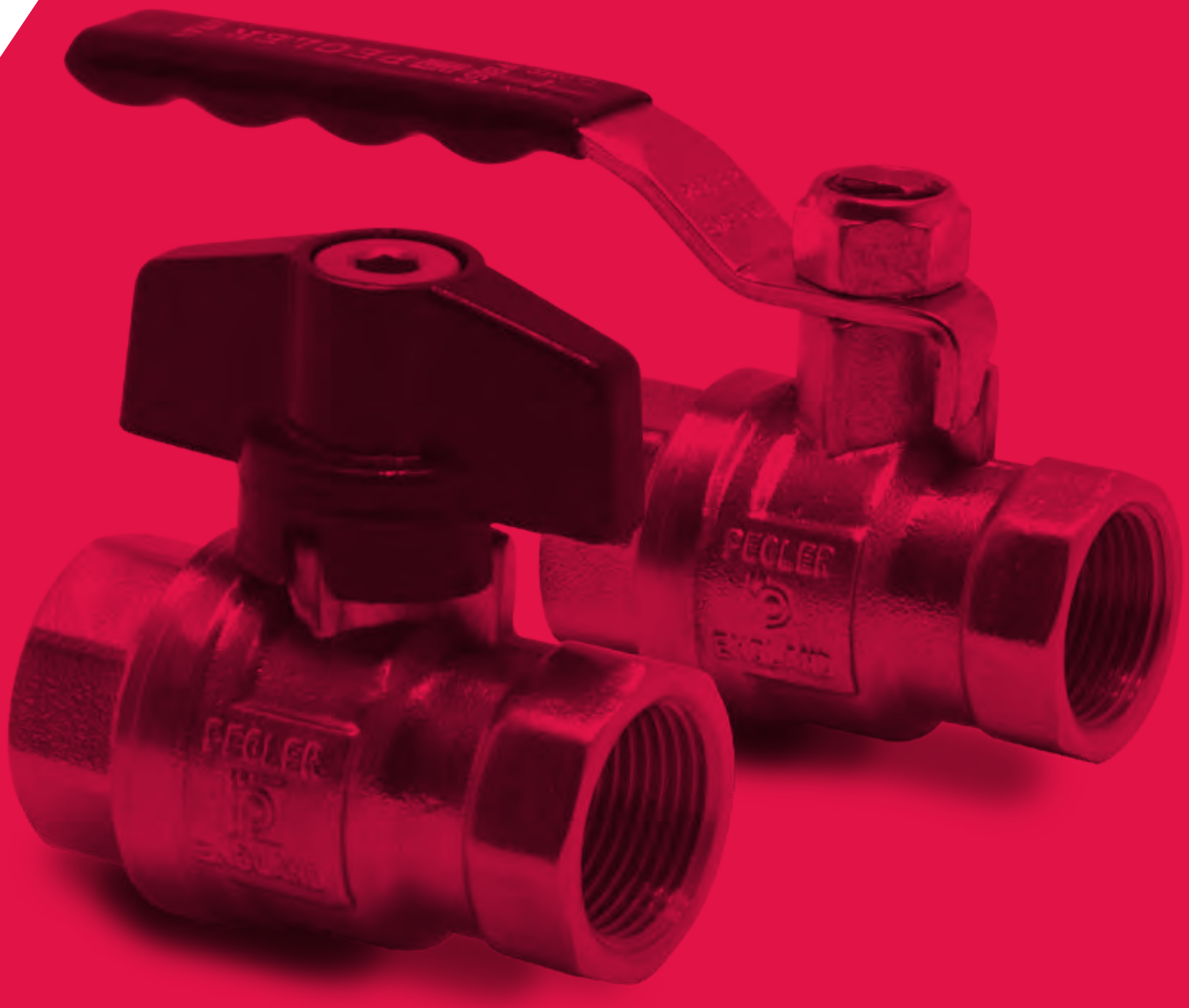

PB100 Ball valve

specification

- PN25 to ½" to 2"
- PN16 2 ½" to 4"
- full bore
- quarter turn operation
- red lever handle
- ½" to 4" sizes
- PTFE ball seals
- brass body
- PTFE gland
- taper thread BS EN 10226 (ISO7-1)
- ISO 228 BS 2771 parallel thread (PT)
- ANSI (NPT) American taper thread (AT)

DN	Connection	ISO7-1 Rc (taper)	ISO 288 G (PT)	ANSI (NPT) (AT)	Total (kg)	Cv (AT)	Kv (AT)
DN15	½"	270001	270021	270041	0.21	19.9	17.0
DN20	¾"	270002	270022	270042	0.27	48.0	41.0
DN25	1"	270003	270023	270043	0.43	81.9	70.0
DN32	1 ¼"	270004	270024	270044	0.63	141.6	121.0
DN40	1 ½"	270005	270025	270045	0.85	234.0	200.0
DN50	2"	270006	270026	270046	1.39	341.6	292.0
DN65	2 ½"	270007	270027	270047	3.16	626.0	535.0
DN80	3"	270008	270028	270048	4.26	994.5	850.0
DN100	4"	270009	270029	270049	6.03	1591.2	1360.0

*Cv - flow rate in US GPM at a pressure drop of 1 psi.
*Kv - flow rate in m3 per hour at a pressure drop of 1 bar.

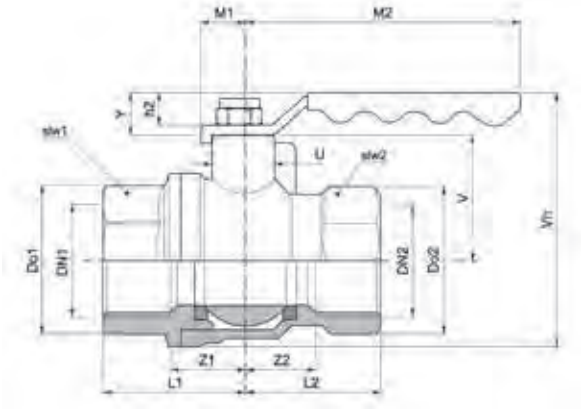

Dimensions (mm)

	Do1	Do2	DN1/DN2	h1	L1	L2	M1	M2	slw1/slw2	U	V	Vh	Y	Z1	Z2
½"	24.0	28.0	DN15	18.0	25.0	27.0	8.0	100.0	24.0	17.0	29.0	69.0	26.0	13.0	15.0
¾"	30.0	35.0	DN20	18.0	28.0	32.0	8.0	100.0	30.0	17.0	32.0	76.0	26.0	16.0	18.0
1"	37.0	42.0	DN25	19.0	31.0	40.0	10.0	109.0	37.0	210	38.0	84.0	26.0	16.0	22.0
1 ¼"	46.0	53.0	DN32	19.0	35.0	46.0	11.0	133.0	46.0	23.0	45.0	97.0	27.0	18.0	27.0
1 ½"	53.0	61.0	DN40	20.0	43.0	46.0	12.0	133.0	53.0	23.0	78.0	110.0	30.0	26.0	28.0
2"	65.0	75.0	DN50	20.0	54.0	56.0	12.0	150.0	65.0	25.0	62.0	128.0	27.0	32.0	33.0
2 ½"	83.0	96.0	DN65	21.0	72.0	69.0	16.0	242.0	83.0	32.0	78.0	170.0	44.0	44.0	41.0
3"	97.0	112.0	DN80	22.0	73.0	87.0	16.0	242.0	97.0	32.0	85.0	188.0	46.0	46.0	49.0
4"	123.0	142.0	DN100	24.0	91.0	96.0	16.0	252.0	123.0	32.0	98.0	209.0	42.0	58.0	53.0

Material specification

Nr	Component	Material
1	Body	Brass
2	End piece	Brass
3	Ball, chrome plated	Brass
4	Stem	Brass
5	Seats	PTFE
6	Gland	PTFE
7	Gland nut	Brass
8	Lever handle, dip-coated	CP steel
9	Handle nut	Steel

Maximum pressure conditions

Size	Max Pressure (bar)	Min/Max Temperature (°C)	Test Pressure Shell (bar)	Test Pressure Seat (bar)	Max Pressure (psi)	Min/Max Temperature (°F)	Test Pressure Shell (psi)	Test Pressure Seat (psi)
½" to 2"	25.0	- 10°C + 120°C	37.5	27.5	362.6	14°F + 348°F	543.9	398.9
2 ½" to 4"	16.0	- 10°C + 120°C	24.0	17.6	232.1	14°F + 348°F	348.1	255.3

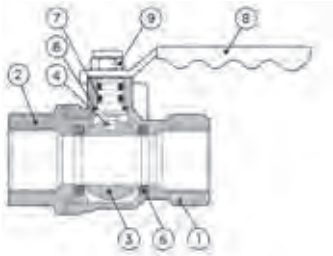

Pressure equipment directive category

Compressed air applications ½" - 1" SEP
1 ¼" - 4" CAT1
All other applications ½" - 4" SEP

Pressure & temperature ratings

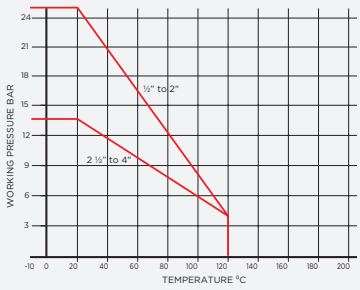

steam water heating oil compressed air

PB500 Ball valve (2 x female thread)

specification

- all sizes rated PN25
- full bore
- quarter turn operation
- blow-out and vandal-proof assembly
- red lever handle
- ¼" to 4" sizes
- chrome plated
- forged brass body
- PTFE ball seals seals
- FPM "O" ring stem seal
- ISO7-1 RC taper thread formally BS21/BSEN 10226
- ISO 228G parallel thread formally BS2779

DN	Connection	ISO7-1 Rc (taper) Code	ISO 288 G (PT) code	ANSI (NPT) (AT) Code	Weight (kg)	Cv	Kv
DN8	¼"	242001		242021	0.15	6.9	5.9
DN10	⅜"	242002		242022	0.15	11.0	9.4
DN15	½"	242003	242043	242023	0.23	19.9	17.0
DN20	¾"	242004	242044	242024	0.40	48.0	41.0
DN25	1"	242005	242045	242025	0.61	81.9	70.0
DN32	1 ¼"	242006	242046	242026	0.95	141.6	121.0
DN40	1 ½"	242007	242047	242027	1.33	234.0	200.0
DN50	2"	242008	242048	242028	2.18	341.6	292.0
DN65	2 ½"	242009	242049	242029	3.75	626.0	535.0
DN80	3"	242010	242050	242030	6.20	994.5	850.0
DN100	4"	242011	242051	242031	10.45	1591.2	1360.0

*Cv - flow rate in US GPM at a pressure drop of 1 psi.
*Kv - flow rate in m3 per hour at a pressure drop of 1 bar.

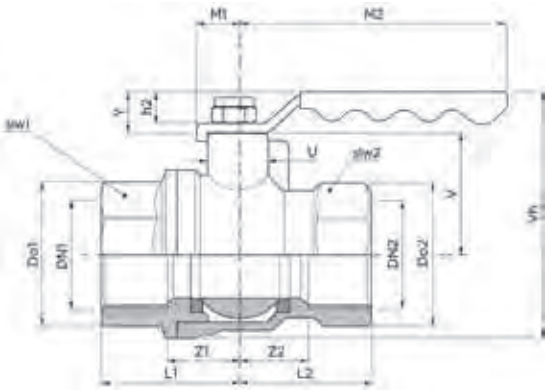

Dimensions (mm)

	Do1/Do2	DN1/DN2	h2	L1/L2	M1	M2	slw1/slw2	U	V	Vh	Y	Z1/Z2
DN8	26.0	¼"	18.0	24.0	9.0	83.0	22.0	9.0	16.0	52.0	21.0	14.0
DN10	29.0	⅜"	18.0	24.0	9.0	84.0	25.0	9.0	16.0	53.0	21.0	15.0
DN15	35.0	½"	18.0	30.0	10.0	94.0	31.0	10.0	20.0	61.0	21.0	18.0
DN20	42.0	¾"	18.0	34.0	10.0	103.0	36.0	11.0	31.0	76.0	21.0	20.0
DN25	49.0	1"	19.0	40.0	10.0	115.0	42.0	11.0	35.0	85.0	22.0	24.0
DN32	58.0	1 ¼"	19.0	48.0	11.0	130.0	50.0	12.0	42.0	97.0	22.0	29.0
DN40	69.0	1 ½"	20.0	50.0	11.0	135.0	60.0	13.0	57.0	119.0	23.0	30.0
DN50	83.0	2"	20.0	62.0	12.0	159.0	71.0	15.0	67.0	137.0	23.0	37.0
DN65	103.0	2 ½"	21.0	75.0	13.0	185.0	89.0	17.0	75.0	158.0	24.0	45.0
DN80	123.0	3"	22.0	89.0	14.0	212.0	107.0	19.0	99.0	195.0	25.0	53.0
DN100	150.0	4"	24.0	107.0	15.0	249.0	130.0	21.0	111.0	224.0	27.0	64.0

Material specification

Nr	Component	Material
1	Body, chrome plated	Forged brass (¼" to 2") Gravity die cast brass (2 ½" to 4")
2	Body cap, chrome plated	Forged brass (¼" to 2") Gravity die cast brass (2 ½" to 4")
3	Ball, chrome plated	Brass bar (¼" to ½") Forged brass (¾" to 2") Gravity die cast brass (2 ½" to 4")
4	Stem	Brass bar
5	Seats	PTFE
6	Thrust washer	PTFE
7	Stem "O" ring	FPM
8	Lever handle	High temperature PVC insulated zinc plated steel
9	Nut (self locking)	Zinc plated steel

Maximum pressure conditions

Size	Max Pressure (bar)	Min/Max Temperature (°C)	Test Pressure Shell (bar)	Test Pressure Seat (bar)	Max Pressure (psi)	Min/Max Temperature (°F)	Test Pressure Shell (psi)	Test Pressure Seat (psi)
¼" to 4"	25.0	- 10°C + 150°C	37.5	27.5	362.6	14°F + 302°F	543.9	398.9

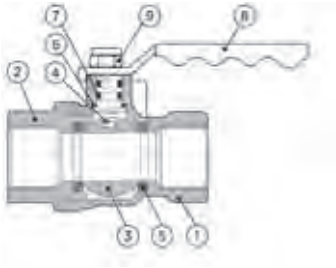

Pressure equipment directive category

Compressed air applications ¼" - 1" SEP
1 ¼" - 4" CAT1
All other applications ¼" - 4" SEP

Pressure & temperature ratings

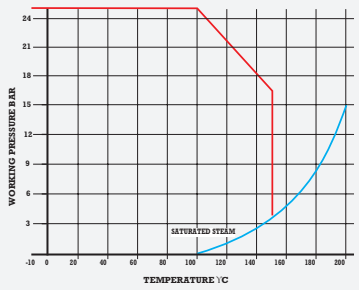

PB500T Ball valve (2 x female thread)

steam | water | heating | oil | compressed air

specification

- all sizes rated PN25
- full bore
- quarter turn operation
- blow-out and vandal-proof assembly
- red T handle
- forged brass body
- ¼" to 1" sizes
- PTFE ball seals
- FPM "O" ring stem seal
- ISO 228G parallel thread formally BS2779

DN	Connection	ISO 228 (PT) Code	Weight (kg)	Cv	Kv
DN8	¼"	243021	0.15	6.9	5.9
DN10	⅜"	243022	0.15	11.0	9.4
DN15	½"	243023	0.22	19.9	17.0
DN20	¾"	243024	0.38	48.0	41.0
DN25	1"	243025	0.58	81.9	70.0

*Cv - flow rate in US GPM at a pressure drop of 1 psi.
*Kv - flow rate in m3 per hour at a pressure drop of 1 bar.

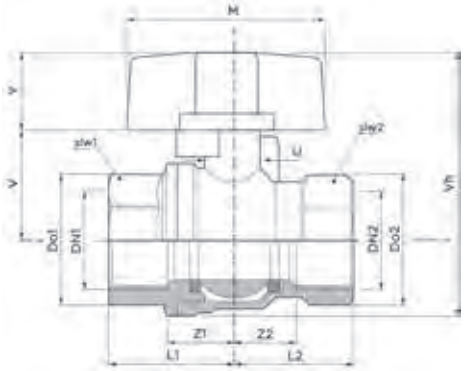

Dimensions (mm)

	Do1/Do2	DN1/DN2	L1/L2	M	slw1/slw2	U	V	Vh	Y	Z1/Z2
DN8	26.0	¼"	24.0	50.0	23.0	9.0	16.0	52.0	18.0	14.0
DN10	29.0	⅜"	24.0	50.0	25.0	9.0	16.0	53.0	18.0	15.0
DN15	35.0	½"	30.0	50.0	31.0	10.0	20.0	60.0	18.0	18.0
DN20	42.0	¾"	34.0	50.0	37.0	11.0	31.0	75.0	18.0	20.0
DN25	49.0	1"	40.0	50.0	43.0	11.0	35.0	83.0	18.0	24.0

Material specification

Nr	Component	Material
1	Body, chrome plated	Forged brass,
2	Body cap, chrome plated	Forged brass
3	Ball, chrome plated	Forged brass (¾" to 1"), brass bar (¼" to ½")
4	Stem	Brass bar
5	Seats	PTFE
6	Thrust washer	PTFE
7	Stem "O" ring	FPM
8	T handle	Aluminium

Maximum pressure conditions

Size	Max Pressure (bar)	Min/Max Temperature (°C)	Test Pressure Shell (bar)	Test Pressure Seat (bar)	Max Pressure (psi)	Min/Max Temperature (°F)	Test Pressure Shell (psi)	Test Pressure Seat (psi)
DN8 to DN25	25.0	- 10°C + 150°C	37.5	27.5	362.6	14°F + 302°F	543.9	398.9

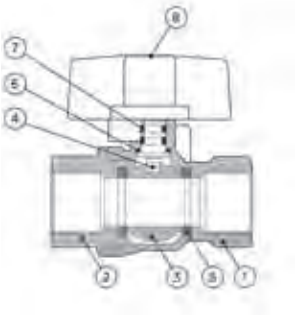

Pressure equipment directive category

All sizes classified SEP

Pressure & temperature ratings

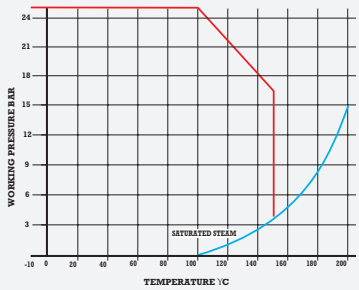

steam water heating oil compressed air

PB500MF Ball valve

specification

- all sizes rated PN25
- full bore
- quarter turn operation
- blow-out and vandal-proof assembly
- brass body
- red lever handle
- ⅜" to 2" sizes
- PTFE ball seals
- FPM "O" ring stem seal
- BS2779 parallel thread (PT)

DN	Connection	Code	Total (kg)	Cv	Kv
DN10	⅜"	242150	0.16	11.0	9.4
DN15	½"	242151	0.22	19.7	17.0
DN20	¾"	252152	0.38	48.0	41.0
DN25	1"	242153	0.57	81.9	70.0
DN32	1 ¼"	242154	0.89	141.6	121.0
DN40	1 ½"	242155	1.27	234.0	200.0
DN50	2"	242156	2.07	341.6	292.0

*Cv - flow rate in US GPM at a pressure drop of 1 psi.
*Kv - flow rate in m3 per hour at a pressure drop of 1 bar.

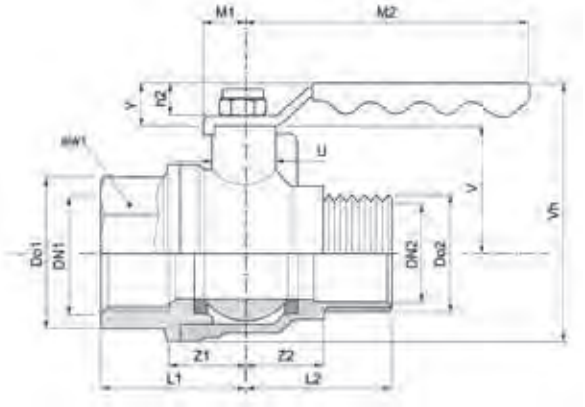

Dimensions (mm)

	Do1	Do2	DN1/DN2	h2	L1/L2	M1	M2	slw1	U	V	Vh	Y	Z1/Z2
DN10	29.0	16.0	⅜"	18.0	24.0	9.0	84.0	25.0	9.0	16.0	53.0	21.0	15.0
DN15	35.0	20.0	½"	18.0	30.0	10.0	94.0	31.0	10.0	20.0	61.0	21.0	18.0
DN20	42.0	25.0	¾"	18.0	34.0	10.0	103.0	36.0	11.0	31.0	76.0	21.0	20.0
DN25	49.0	32.0	1"	19.0	40.0	10.0	115.0	42.0	11.0	35.0	85.0	22.0	24.0
DN32	58.0	40.0	1 ¼"	19.0	48.0	11.0	130.0	50.0	12.0	42.0	97.0	22.0	29.0
DN40	69.0	48.0	1 ½"	20.0	50.0	11.0	135.0	60.0	13.0	57.0	119.0	23.0	30.0
DN50	83.0	58.0	2"	20.0	62.0	12.0	159.0	71.0	15.0	67.0	137.0	23.0	37.0

Material specification

Nr	Component	Material
1	Body, chrome plated	Brass
2	End piece, chrome plated	Brass
3	Ball, chrome plated	Brass
4	Stem	Brass bar
5	Seats	PTFE
6	Friction washer	PTFE
7	"O" ring seats	FPM
8	Lever handle	PVC insulated steel

Maximum pressure conditions

Size	Max Pressure (bar)	Min/Max Temperature (°C)	Test Pressure Shell (bar)	Test Pressure Seat (bar)	Max Pressure (psi)	Min/Max Temperature (°F)	Test Pressure Shell (psi)	Test Pressure Seat (psi)
⅜" to 2"	25.0	- 10°C + 150°C	37.5	27.5	362.6	14°F + 302°F	543.9	398.9

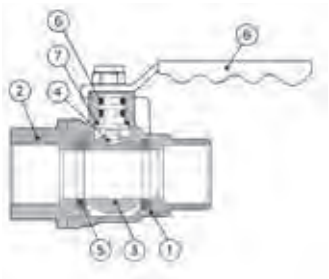

Pressure equipment directive category

Compressed air applications ⅜" - 1" SEP
1 ¼" - 2" CAT1
All other applications ⅜" - 2" SEP

Pressure & temperature ratings

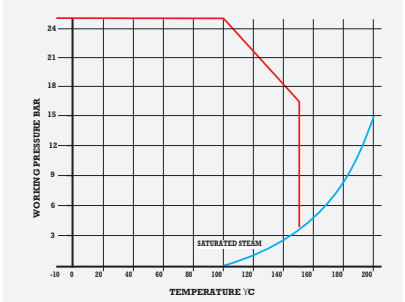

PB500MF T Ball valve

steam water heating oil compressed air

specification

- all sizes rated PN25
- full bore
- quarter turn operation
- blow-out and vandal-proof assembly
- red T handle
- brass body
- ⅜" to 1" sizes
- PTFE ball seals
- FPM "O" ring stem seal
- BS2779 parallel thread (PT)

DN	Connection	Code	Total (kg)	Cv	Kv
DN10	⅜"	242160	0.14	11.0	9.4
DN15	½"	242161	0.20	19.7	17.0
DN20	¾"	242162	0.36	48.0	41.0
DN25	1"	242163	0.56	81.9	70.0

*Cv - flow rate in US GPM at a pressure drop of 1 psi.
*Kv - flow rate in m3 per hour at a pressure drop of 1 bar.

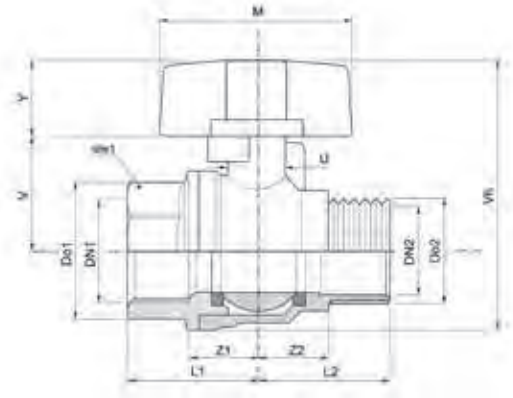

Dimensions (mm)

	Do1	Do2	DN1/DN2	L1/L2	M	slw1	U	V	Vh	Y	Z1/Z2
⅜"	29.0	16.0	DN10	24.0	50.0	25.0	9.0	16.0	54.0	18.0	15.0
½"	35.0	20.0	DN15	30.0	50.0	31.0	10.0	20.0	60.0	18.0	18.0
¾"	42.0	25.0	DN20	34.0	50.0	36.0	11.0	31.0	75.0	18.0	20.0
1"	49.0	32.0	DN25	40.0	50.0	42.0	11.0	35.0	83.0	18.0	24.0

Material specification

Nr	Component	Material
1	Body, chrome plated	Brass
2	End piece, chrome plated	Brass
3	Ball, chrome plated	Brass
4	Stem	Brass bar
5	Seats	PTFE
6	Friction washer	PTFE
7	"O" ring seats	FPM
8	T handle	Steel

Maximum pressure conditions

Size	Max Pressure (bar)	Min/Max Temperature (°C)	Test Pressure Shell (bar)	Test Pressure Seat (bar)	Max Pressure (psi)	Min/Max Temperature (°F)	Test Pressure Shell (psi)	Test Pressure Seat (psi)
⅜" to 1"	25.0	- 10°C + 150°C	37.5	27.5	362.6	14°F + 302°F	543.9	398.9

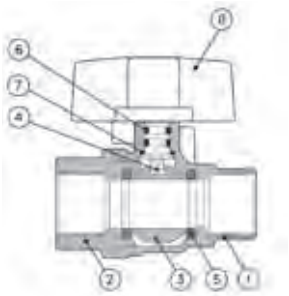

Pressure equipment directive category

All sizes classified SEP

Pressure & temperature ratings

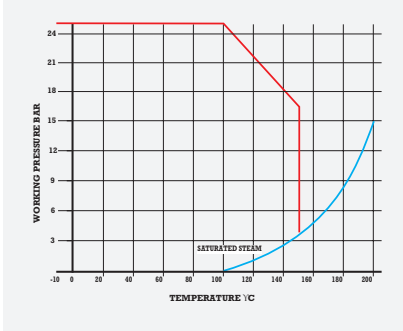

PB500DC Ball valve

water heating

specification

- all sizes rated PN25
- full bore
- quarter turn operation
- blow-out and vandal-proof assembly
- red lever handle
- brass body
- ½" to 1" sizes
- PTFE ball seals
- FPM "O" ring stem seal
- BS2779 parallel thread (PT)

DN	Connection	Code	Total (kg)	Cv	Kv
DN15	½"	242166	0.32	19.9	17.0
DN20	¾"	242167	0.50	48.0	41.0
DN25	1"	242168	0.71	81.9	70.0

*Cv - flow rate in US GPM at a pressure drop of 1 psi.
*Kv - flow rate in m3 per hour at a pressure drop of 1 bar.

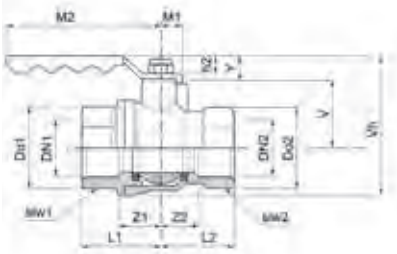

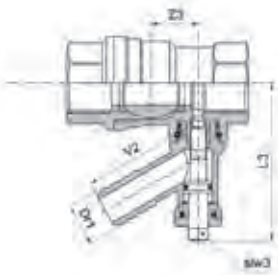

Dimensions (mm)

	Do1/Do2	DN1/DN2	h2	L1/L2	M1	M2	slw1/slw2	U	V	Vh	Y	Z1/Z2
½"	35.0	DN15	18.0	30.0	10.0	94.0	31.0	10.0	20.0	61.0	21.0	18.0
¾"	42.0	DN20	18.0	34.0	10.0	103.0	36.0	11.0	31.0	76.0	21.0	20.0
1"	49.0	DN25	19.0	40.0	10.0	115.0	42.0	11.0	35.0	85.0	22.0	24.0

	Dr1	L3	slw3	V2	Z3
½"	14.5	52.0	7.5	35.0	18.6
¾"	14.5	55.0	7.5	36.0	21.0
1"	14.5	58.0	7.5	14.5	25.0

Material specification

Nr	Component	Material
1	Body, chrome plated	Brass
2	Body cap	Brass
3	Ball, chrome plated	Brass
4	Stem, chrome plated	Brass
5	Seats	PTFE
6	Friction washer	PTFE
7	"O" ring seals	FPM
8	Lever handle	PVC insulated steel
9	Handle nut	FPM
10	Drain	Brass
11	Drain washer	EPDM

Maximum pressure conditions

Size	Max Pressure (bar)	Min/Max Temperature (°C)	Test Pressure Shell (bar)	Test Pressure Seat (bar)	Max Pressure (psi)	Min/Max Temperature (°F)	Test Pressure Shell (psi)	Test Pressure Seat (psi)
½" to 1"	25.0	- 10°C + 150°C	37.5	27.5	362.6	14°F + 302°F	543.9	398.9

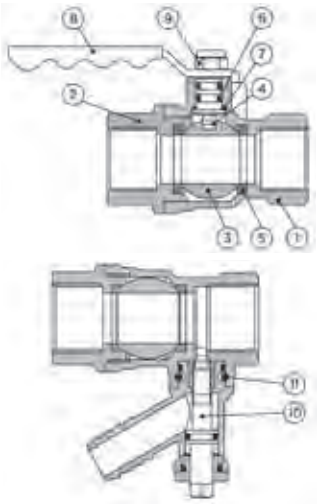

Pressure equipment directive category

All sizes classified SEP

Pressure & temperature ratings

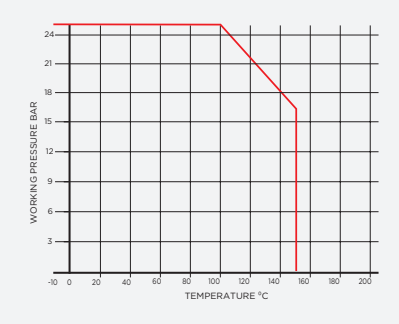

PB550 Ball valve (2 x female thread)

steam | water | heating | cooling | oil | compressed air

specification

- all sizes rated PN25
- full bore
- quarter turn operation
- blow-out and vandal-proof assembly
- blue lever handle
- ½" to 2" sizes
- PTFE ball seals
- DZR body
- FPM "O" ring stem seal
- ISO7-1 RC taper thread formally BS21/ BSEN 10226
- ISO 228G parallel thread formally BS2779

DN	Connection	ISO7-1 Rc (taper) Code	ISO 288G (PT) Code	Weight (kg)	Cv	Kv
DN15	½"	245201	245150	0.23	19.9	17.0
DN20	¾"	245202	245151	0.41	48.0	41.0
DN25	1"	245203	245152	0.61	81.9	70.0
DN32	1 ¼"	245204	245153	0.94	141.6	121.0
DN40	1 ½"	245205	245154	1.33	234.0	200.0
DN50	2"	245206	245155	2.21	341.6	292.0

*Cv - flow rate in US GPM at a pressure drop of 1 psi.
*Kv - flow rate in m3 per hour at a pressure drop of 1 bar.

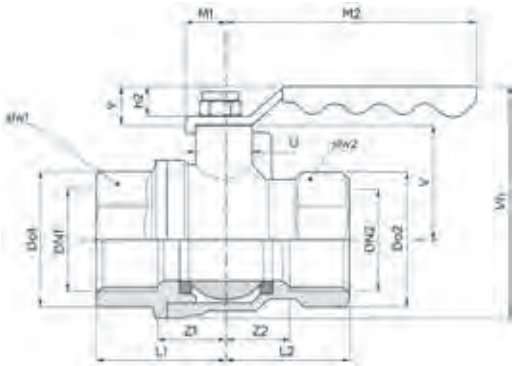

Dimensions (mm)

	Do1/Do2	DN1/DN2	h2	L1/L2	M1	slw1/slw2	U	V	Vh	Y	Z1/Z2
DN15	35.0	DN15	18.0	30.0	10.0	31.0	10.0	20.0	61.0	21.0	18.0
DN20	42.0	DN20	18.0	34.0	10.0	36.0	11.0	31.0	76.0	21.0	20.0
DN25	49.0	DN25	19.0	40.0	10.0	42.0	11.0	35.0	85.0	22.0	24.0
DN32	58.0	DN32	19.0	48.0	11.0	50.0	12.0	42.0	97.0	22.0	29.0
DN40	69.0	DN40	20.0	50.0	11.0	60.0	13.0	57.0	119.0	23.0	30.0
DN50	83.0	DN50	20.0	62.0	12.0	71.0	15.0	67.0	137.0	23.0	37.0

Material specification

Nr	Component	Material
1	Body	DZR brass
2	Body cap	DZR brass
3	Ball, chrome plated	Brass
4	Stem	DZR brass
5	Stem "O" ring	FPM
6	Seats	PTFE
7	Lever handle	PVC insulated steel
8	Nut (self locking)	Zinc plated steel

Maximum pressure conditions

Size	Max Pressure (bar)	Min/Max Temperature (°C)	Test Pressure Shell (bar)	Test Pressure Seat (bar)	Max Pressure (psi)	Min/Max Temperature (°F)	Test Pressure Shell (psi)	Test Pressure Seat (psi)
½" to 2"	25.0	- 10°C + 150°C	37.5	27.5	293.3	14°F + 302°F	543.9	398.9

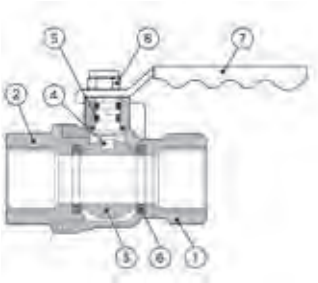

Pressure equipment directive category

Compressed air applications ½" - 1" SEP
1 ¼" - 2" CAT1
All other applications ½" - 2" SEP

Pressure & temperature ratings

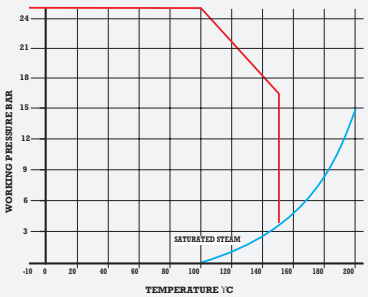

steam water heating cooling oil compressed air

PB550 T Ball valve (2 x female thread)

WRAS

specification

- all sizes rated PN25
- full bore
- quarter turn operation
- blow-out and vandal-proof assembly
- blue T handle
- ½" to 1" sizes
- DZR body
- PTFE ball seals
- FPM "O" ring stem seal
- ISO7-1 RC taper thread formally BS21/ BSEN 10226
- ISO 228G parallel thread formally BS2779

DN	Connection	ISO7-1 Rc (taper) Code	ISO 228G (parallel) Code	Weight (kg)	Cv	Kv
DN15	½"	245211	245215	0.22	19.9	17.0
DN20	¾"	245212	245216	0.38	48.0	41.0
DN25	1"	245213		0.58	81.9	70.0

*Cv - flow rate in US GPM at a pressure drop of 1 psi.
*Kv - flow rate in m3 per hour at a pressure drop of 1 bar.

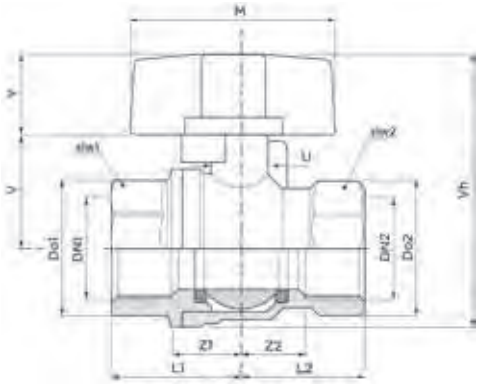

Dimensions (mm)

	Do1/Do2	DN1/DN2	L1/L2	M	slw1/slw2	U	V	Vh	Y	Z1/Z2
DN15	35.0	DN15	30.0	49.0	31.0	10.0	16.0	59.0	23.0	18.0
DN20	35.0	DN20	30.0	49.0	31.0	11.0	28.0	71.0	23.0	18.0
DN25	45.0	DN25	34.0	60.0	39.0	11.0	28.0	82.0	29.0	20.0

Material specification

Nr	Component	Material
1	Body	DZR brass
2	Body cap	DZR brass
3	Ball, chrome plated	Brass
4	Stem	DZR brass
5	Stem "O" ring	FPM
6	Seats	PTFE
7	T handle	Aluminium
8	Security screws	Nickel plated brass

Maximum pressure conditions

Size	Max Pressure (bar)	Min/Max Temperature (°C)	Test Pressure Shell (bar)	Test Pressure Seat (bar)	Max Pressure (psi)	Min/Max Temperature (°F)	Test Pressure Shell (psi)	Test Pressure Seat (psi)
½" to 1"	25.0	- 10°C + 150°C	37.5	27.5	293.3	14°F + 302°F	543.9	398.9

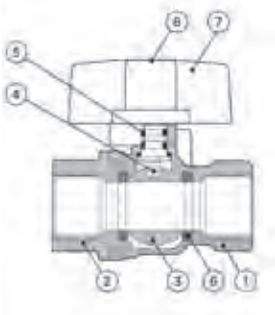

Pressure equipment directive category

All sizes classified SEP

Pressure & temperature ratings

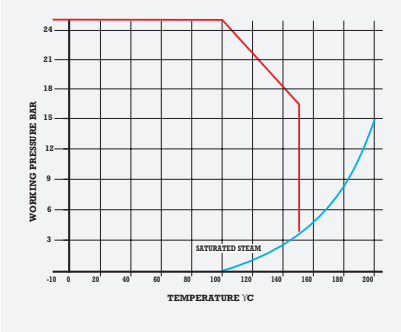

PB500 Ball valve

steam | water | heating | oil | compressed air | gas inert | gas combustible | gas corrosive

specification

- all sizes PN25
- full bore
- quarter turn operation
- blow-out and vandal-proof assembly
- yellow lever handle
- ¼" to 4" sizes
- chrome plated
- PTFE ball seals
- forged brass body
- FPM "O" ring stem seal
- ISO7-1 RC taper thread formally BS21/BSEN 10226
- ANSI (NPT) American taper thread (AT)
- ISO 228G parallel thread formally BS2779

DN	Connection	ISO7-1 Rc (taper)	ISO 288 G (PT)	ANSI (NPT) (AT)	Total (kg)	Cv	Kv	Kv gas
DN8	¼"	242101	242060	242121	0.15	6.9	5.9	3.8
DN10	⅜"	242102	242061	242122	0.15	11.0	9.4	4.2
DN15	½"	242103	242062	242123	0.23	19.9	17.0	11.3
DN20	¾"	242104	242063	242124	0.40	48.0	41.0	23.8
DN25	1"	242105	242064	242125	0.61	81.9	70.0	31.1
DN32	1 ¼"	242106	242065	242126	0.95	141.6	121.0	67.2
DN40	1 ½"	242107	242066	242127	1.33	234.0	200.0	101.5
DN50	2"	242108	242067	242128	2.18	341.6	292.0	148.0
DN65	2 ½"	242109	242068		3.75	626.0	535.0	-
DN80	3"	242110	242069		6.20	994.5	850.0	-
DN100	4"	242111	242070		10.45	1591.2	1360.0	-

*Cv - flow rate in US GPM at a pressure drop of 1 psi. *Kv - flow rate in m3 per hour at a pressure drop of 1 bar. *Kv Gas - flow rate in m3 per hour at a pressure drop of 1 mbar.

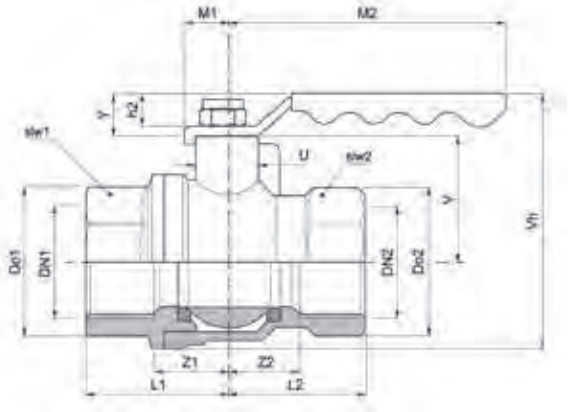

Dimensions (mm)

	Do1/Do2	DN1/DN2	h2	L1/L2	M1	M2	slw1/slw2	U	V	Vh	Y	Z1/Z2
DN8	26.0	¼"	18.0	24.0	9.0	83.0	22.0	9.0	16.0	52.0	21.0	14.0
DN10	29.0	⅜"	18.0	24.0	9.0	84.0	25.0	9.0	16.0	53.0	21.0	15.0
DN15	35.0	½"	18.0	30.0	10.0	94.0	31.0	10.0	20.0	61.0	21.0	18.0
DN20	42.0	¾"	18.0	34.0	10.0	103.0	36.0	11.0	31.0	76.0	21.0	20.0
DN25	49.0	1"	19.0	40.0	10.0	115.0	42.0	11.0	35.0	85.0	22.0	24.0
DN32	58.0	1 ¼"	19.0	48.0	11.0	130.0	50.0	12.0	42.0	97.0	22.0	29.0
DN40	69.0	1 ½"	20.0	50.0	11.0	135.0	60.0	13.0	57.0	119.0	23.0	30.0
DN50	83.0	2"	20.0	62.0	12.0	159.0	71.0	15.0	67.0	137.0	23.0	37.0
DN65	103.0	2 ½"	21.0	75.0	13.0	185.0	89.0	17.0	75.0	158.0	24.0	45.0
DN80	123.0	3"	22.0	89.0	14.0	212.0	107.0	19.0	99.0	195.0	25.0	53.0
DN100	150.0	4"	24.0	107.0	15.0	249.0	130.0	21.0	111.0	224.0	27.0	64.0

Material specification

Nr	Component	Material
1	Body, chrome plated	Forged brass (¼" to 2") Gravity die cast brass (2 ½" to 4")
2	End piece, chrome plated	Forged brass (¼" to 2") Gravity die cast brass (2 ½" to 4")
3	Ball, chrome plated	Brass bar (¼" to ½") Forged brass (¾" to 2") Gravity die cast brass (2 ½" to 4")
4	Stem	Brass bar
5	Seats	PTFE
6	Thrust washer	PTFE
7	Stem "O" ring	FPM
8	Lever handle, zinc plated	High temperature PVC insulated steel
9	Nut (self locking)	Zinc plated steel

Pressure equipment directive category

Gas / compressed air applications ¼" - ¾" SEP
1" - 4" CAT1
All other applications ¼" - 4" SEP

Maximum pressure conditions

Size	Max Pressure (bar)	Min/Max Temperature (°C)	Test Pressure Shell (bar)	Test Pressure Seat (bar)	Max Pressure (psi)	Min/Max Temperature (°F)	Test Pressure Shell (psi)	Test Pressure Seat (psi)
water ¼" to 4"	25.0	- 10°C + 150°C	37.5	27.5	362.6	14°F + 302°F	543.9	398.9

Size	Max Pressure (bar)	Min/Max Temperature (°C)	Test Pressure Shell (bar)	Test Pressure Seat (bar)	Max Pressure (psi)	Min/Max Temperature (°F)	Test Pressure Shell (psi)	Test Pressure Seat (psi)
gas ¼" to 4"	5 (10*)	- 20°C + 60°C	37.5	27.5	87.0 (145*)	-4°F + 140°F	543.9	392.9

*LPG only

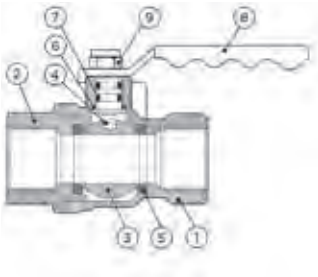

Pressure & temperature ratings

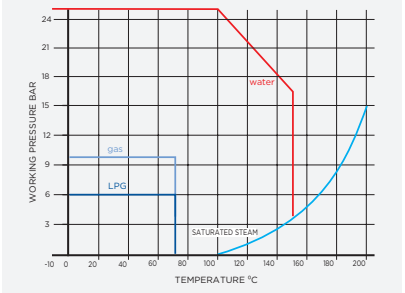

steam | water | heating | oil | compressed air | gas inert | gas combustible | gas corrosive

PB700 Ball valve

specification

- all sizes rated PN40
- full bore
- quarter turn operation
- blow-out and vandal-proof assembly
- ¼" to 4" sizes
- PTFE ball seals
- double "O" ring FPM
- forged brass body
- stem seals
- taper thread BS EN10226 (ISO7-1)
- ANSI (NPT) American taper thread (AT)
- BS2779 parallel thread (PT)

DN	Connection	ISO7-1 Rc (taper)	ANSI (NTP) (taper)	ISO 288 (PT)	Total (kg)	Cv	Kv	Kv gas
DN8	¼"	230001	230061		0.16	6.9	5.9	3.8
DN10	⅜"	230002	230062		0.16	11.0	9.4	4.2
DN15	½"	230003	230063	230043	0.24	19.9	17.0	11.3
DN20	¾"	230004	230064	230044	0.44	48.0	41.0	23.8
DN25	1"	230005	230065	230045	0.64	81.9	70.0	31.1
DN32	1 ¼"	230006	230066	230046	1.00	141.6	121.0	67.2
DN40	1 ½"	230007	230067	230047	1.44	234.0	200.0	101.5
DN50	2"	230008	230068	230048	2.38	341.6	292.0	148.0
DN65	2 ½"	230009	230069	230049	4.14	626.0	535.0	-
DN80	3"	230010	230070	230050	6.71	994.5	850.0	-
DN100	4"	242011	230071	230051	10.98	1591.2	1360.0	-

*Cv - flow rate in US GPM at a pressure drop of 1 psi. *Kv - flow rate in m3 per hour at a pressure drop of 1 bar. *Kv Gas - flow rate in m3 per hour at a pressure drop of 1 mbar.

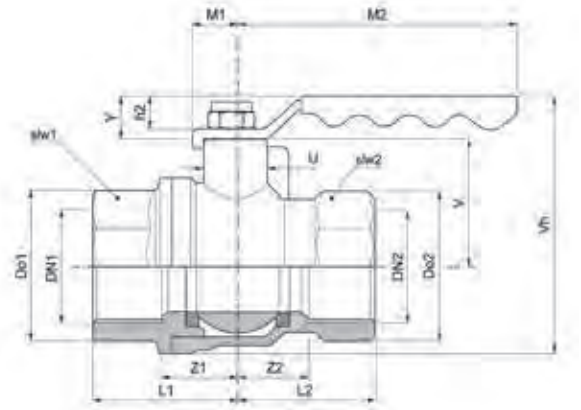

Dimensions (mm)

	Do1/Do2	DN1/DN2	h2	L1/L2	M1	M2	slw1/slw2	U	V	Vh	Y	Z1/Z2
DN8	26.0	¼"	18.0	24.0	9.0	83.0	22.0	9.0	16.0	52.0	21.0	14.0
DN10	29.0	⅜"	18.0	24.0	9.0	84.0	25.0	9.0	16.0	53.0	21.0	15.0
DN15	35.0	½"	18.0	30.0	10.0	94.0	31.0	10.0	20.0	61.0	21.0	18.0
DN20	42.0	¾"	18.0	34.0	10.0	103.0	36.0	11.0	31.0	76.0	21.0	20.0
DN25	49.0	1"	19.0	40.0	10.0	115.0	42.0	11.0	35.0	85.0	22.0	24.0
DN32	58.0	1 ¼"	19.0	48.0	11.0	130.0	50.0	12.0	42.0	97.0	22.0	29.0
DN40	69.0	1 ½"	20.0	50.0	11.0	135.0	60.0	13.0	57.0	119.0	23.0	30.0
DN50	83.0	2"	20.0	62.0	12.0	159.0	71.0	15.0	67.0	137.0	23.0	37.0
DN65	103.0	2 ½"	21.0	75.0	13.0	185.0	89.0	17.0	75.0	158.0	24.0	45.0
DN80	123.0	3"	22.0	89.0	14.0	212.0	107.0	19.0	99.0	195.0	25.0	53.0
DN100	150.0	4"	24.0	107.0	15.0	249.0	130.0	21.0	111.0	224.0	27.0	64.0

Material specification

Nr	Component	Material
1	Body, chrome plated	Forged brass (¼" to 2") Gravity die cast brass (2 ½" to 4")
2	Endpiece, chrome plated	Forged brass (¼" to 2") Gravity die cast brass (2 ½" to 4")
3	Ball, chrome plated	Brass bar (¼" to ½") Forged brass (¾" to 2") Gravity die cast brass (2 ½" to 4")
4	Stem	Brass bar
5	Thrust washer	PTFE
6	Seats	PTFE
7	Lever handle, zinc plated	High temperature PVC insulated steel
8	Nut (self locking)	Zinc plated steel

Pressure equipment directive category

Gas / compressed air applications ¼" - ¾" SEP
1" - 4" CAT1
All other applications ¼" - 4" SEP

Maximum pressure conditions

Size	Max Pressure (bar)	Min/Max Temperature (°C)	Test Pressure Shell (bar)	Test Pressure Seat (bar)	Max Pressure (psi)	Min/Max Temperature (°F)	Test Pressure Shell (psi)	Test Pressure Seat (psi)
water ¼" to 4"	25.0	- 10°C + 150°C	37.5	27.5	362.6	14°F + 302°F	543.9	398.9
Size	**Max Pressure (bar)**	**Min/Max Temperature (°C)**	**Test Pressure Shell (bar)**	**Test Pressure Seat (bar)**	**Max Pressure (psi)**	**Min/Max Temperature (°F)**	**Test Pressure Shell (psi)**	**Test Pressure Seat (psi)**
gas ¼" to 4"	5 (10*)	- 20°C + 60°C	37.5	27.5	87.0 (145*)	-4°F + 140°F	543.9	398.9

*LPG only

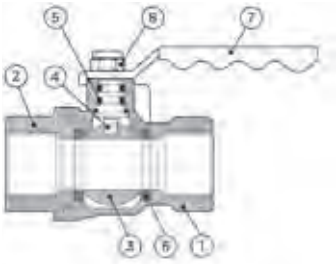

Pressure & temperature ratings

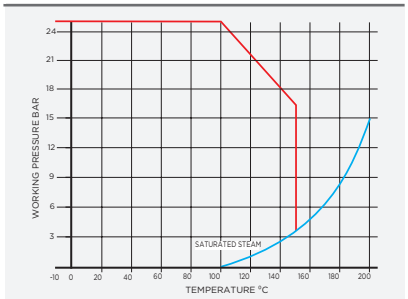

PB700T Ball valve

steam | water | heating | oil | compressed air | gas inert | gas combustible | gas corrosive

specification

- all sizes rated PN40
- full bore
- quarter turn operation
- blow-out and vandal-proof assembly
- yellow T handle
- chrome plated
- forged brass body
- ¼" to 1" sizes
- PTFE ball seals
- FPM "O" ring stem seal
- ISO 228G parallel thread formally BS2779

DN	Connection	Code	Total (kg)	Cv	Kv	Kv gas
DN8	¼"	231001	0.14	6.9	5.9	3.8
DN10	⅜"	231002	0.15	11.0	9.4	4.2
DN15	½"	231003	0.22	19.9	17.0	11.3
DN20	¾"	231004	0.41	48.0	41.0	23.8
DN25	1"	231005	0.63	81.9	70.0	31.1

*Cv - flow rate in US GPM at a pressure drop of 1 psi.
*Kv - flow rate in m3 per hour at a pressure drop of 1 bar.
*Kv Gas - flow rate in m3 per hour at a pressure drop of 1 mbar.

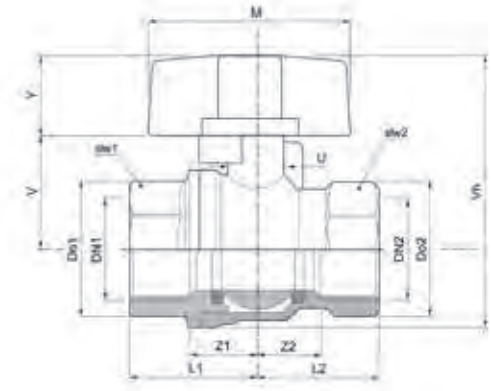

Dimensions (mm)

	Do1/Do2	DN1/DN2	L1/L2	M	slw1/slw2	U	V	Vh	Y	Z1/Z2
DN8	26.0	¼"	24.0	50.0	23.0	9.0	16.0	52.0	18.0	14.0
DN10	29.0	⅜"	24.0	50.0	25.0	9.0	16.0	53.0	18.0	15.0
DN15	35.0	½"	30.0	50.0	31.0	10.0	20.0	60.0	18.0	18.0
DN20	42.0	¾"	34.0	50.0	37.0	11.0	31.0	75.0	18.0	20.0
DN25	49.0	1"	40.0	50.0	43.0	11.0	35.0	83.0	18.0	24.0

Material specification

Nr	Component	Material
1	Body, chrome plated	Forged brass
2	End piece, chrome plated	Forged brass
3	Ball, chrome plated	Forged brass (¾" to 1"), brass bar (¼" to ½")
4	Stem	Brass bar
5	Seats	PTFE
6	Thrust washer	PTFE
7	Stem "O" ring	FPM
8	T handle	Aluminium, painted
9	Security screws, nickel plated	Brass

Maximum pressure conditions

Size	Max Pressure (bar)	Min/Max Temperature (°C)	Test Pressure Shell (bar)	Test Pressure Seat (bar)	Max Pressure (psi)	Min/Max Temperature (°F)	Test Pressure Shell (psi)	Test Pressure Seat (psi)
water ¼" to 1"	25.0	- 10°C + 150°C	37.5	27.5	362.6	14°F + 302°F	543.9	398.9
Size	**Max Pressure (bar)**	**Min/Max Temperature (°C)**	**Test Pressure Shell (bar)**	**Test Pressure Seat (bar)**	**Max Pressure (psi)**	**Min/Max Temperature (°F)**	**Test Pressure Shell (psi)**	**Test Pressure Seat (psi)**
gas ¼" to 1"	5 (10*)	- 20°C + 60°C	37.5	27.5	87.0 (145*)	-4°F + 140°F	543.9	398.9

*LPG only

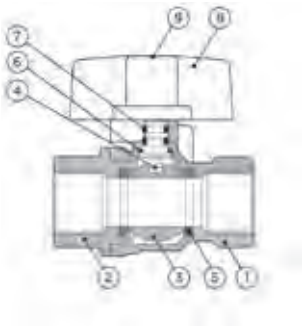

Pressure equipment directive category

Gas / compressed air applications
¼" - ¾" SEP 1" CAT1
All other applications ¼" - 1" SEP

Pressure & temperature ratings

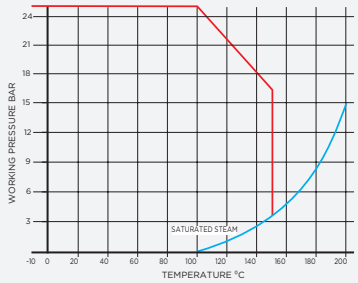

steam water heating oil compressed air

PB300 Ball valve

specification

- all sizes rated PN16
- full bore
- quarter turn operation
- blow-out and vandal-proof assembly
- red lever handle
- forged brass body
- 15 to 54mm sizes
- PTFE ball seals
- FPM "O" ring stem seal
- Prestex compression ends to EN1254/2 (formerly BS864/2)

DN	Code	Total (kg)	Cv	Kv
15mm	254001	0.27	9.9	17.0
22mm	254002	0.45	48.0	41.0
28mm	254003	0.69	81.9	70.0
35mm	254004	0.85	141.6	121.0
42mm	254005	1.62	234.0	200.0
54mm	254006	2.62	341.6	292.0

*Cv - flow rate in US GPM at a pressure drop of 1 psi.
*Kv - flow rate in m3 per hour at a pressure drop of 1 bar.

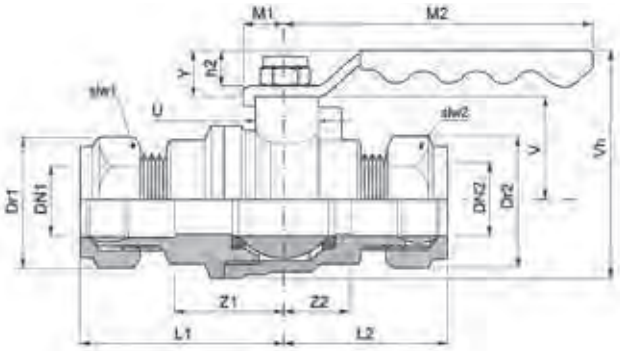

Dimensions (mm)

	C1/C2	DN1/DN2	Dr1/Dr2	h2	L1/L2	M1	M2	slw1/slw2	U	V	Vh	Y	Z1/Z2
15mm	12.0	DN15	26.0	14.0	38.0	10.0	96.0	24.0	14.0	23.0	55.0	16.0	26.0
22mm	16.0	DN22	35.0	15.0	43.0	10.0	96.0	32.0	18.0	23.0	69.0	16.0	27.0
28mm	18.0	DN28	41.0	17.0	49.0	11.0	101.0	38.0	18.0	35.0	78.0	20.0	31.0
35mm	19.0	DN35	50.0	20.0	60.0	11.0	103.0	46.0	18.0	39.0	90.0	23.0	41.0
42mm	20.0	DN42	61.0	24.0	66.0	12.0	159.0	56.0	24.0	51.0	111.0	27.0	46.0
54mm	24.0	DN54	78.0	26.0	80.0	13.0	158.0	72.0	24.0	55.0	126.0	29.0	56.0

Material specification

Nr	Component	Material
1	Body, chrome plated	Forged brass
2	End piece, chrome plated	Forged brass
3	Ball, chrome plated	Brass bar (15mm) Forged brass (22 - 54mm)
4	Stem	Brass bar
5	Seats	PTFE
6	Thrust washer	PTFE
7	Stem "O" ring	FPM
8	Lever handle, zinc plated	High temperature PVC insulated steel
9	Nut (self locking), zinc plated	Steel
10	Compression nut, chrome plated	Forged brass
11	Compression cone	Brass

Maximum pressure conditions

Size	Max Pressure (bar)	Min/Max Temperature (°C)	Test Pressure Shell (bar)	Test Pressure Seat (bar)	Max Pressure (psi)	Min/Max Temperature (°F)	Test Pressure Shell (psi)	Test Pressure Seat (psi)
15 to 54mm	16.0	- 10°C + 120°C	24.0	17.5	232.1	14°F + 248°F	348.1	253.8

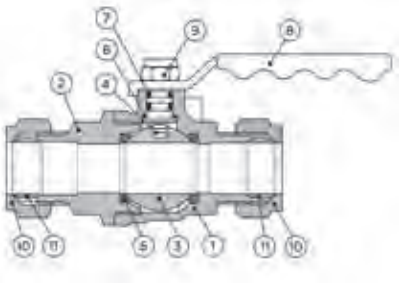

Pressure equipment directive category

All sizes classified SEP

Pressure & temperature ratings

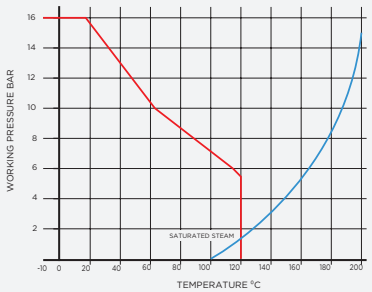

PB300T Ball valve

steam water heating oil compressed air

specification

- all sizes rated PN16
- full bore
- quarter turn operation
- blow-out and vandal-proof assembly
- red T handle
- forged brass body
- 15 to 28mm sizes
- PTFE ball seals
- FPM "O" ring stem seal
- Prestex compression ends to EN1254/2

Connection	Code	Total (kg)	Cv	Kv
15mm	255001	2.54	19.9	17.0
22mm	255002	4.24	48.0	41.0
28mm	255003	3.37	81.9	70.0

*Cv - flow rate in US GPM at a pressure drop of 1 psi.
*Kv - flow rate in m3 per hour at a pressure drop of 1 bar.

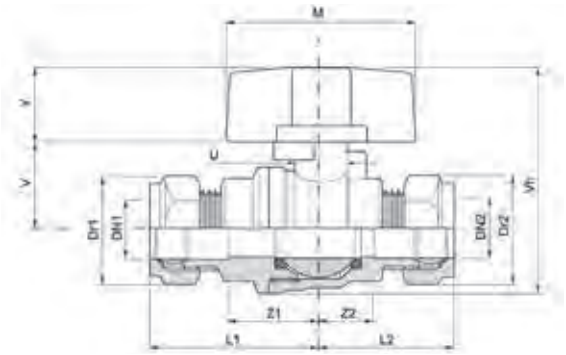

Dimensions (mm)

	C1/C2	DN1/DN2	Dr1/Dr2	L1/L2	M	slw1/slw2	U	V	Vh	Y	Z1/Z2
15mm	12.0	DN15	26.0	38.0	49.0	24.0	14.0	23.0	55.0	22.0	26.0
22mm	16.0	DN22	35.0	43.0	60.0	32.0	18.0	23.0	69.0	25.0	27.0
28mm	18.0	DN28	41.0	49.0	60.0	38.0	18.0	35.0	78.0	28.0	31.0

Material specification

Nr	Component	Material
1	Body, chrome plated	Forged brass
2	End piece, chrome plated	Forged brass
3	Ball, chrome plated	Brass bar (15mm) Forged brass (22 - 28mm)
4	Stem	Brass bar
5	Seats	PTFE
6	Thrust washer	PTFE
7	Stem "O" ring	FPM
8	T handle	Aluminium, painted
9	Compression nut, chrome plated	Forged brass
10	Compression cone	Brass
11	Security screw, nickel plated	Brass

Maximum pressure conditions

Size	Max Pressure (bar)	Min/Max Temperature (°C)	Test Pressure Shell (bar)	Test Pressure Seat (bar)	Max Pressure (psi)	Min/Max Temperature (°F)	Test Pressure Shell (psi)	Test Pressure Seat (psi)
15 to 28mm	16.0	- 10°C + 120°C	24.0	17.5	232.1	14°F + 248°F	348.1	253.8

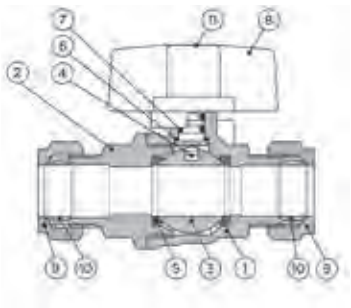

Pressure equipment directive category

All sizes classified SEP

Pressure & temperature ratings

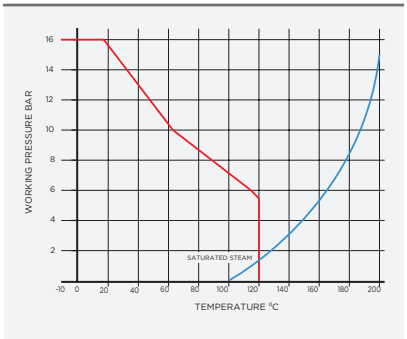

Pegler valve

butterfly valves

V905 Butterfly valve (2 x flange)

water heating

specification

- all sizes rated PN16
- stainless steel disc and stem
- quarter turn
- EPDM liner
- fully lugged to BS EN 593:2004
- ductile iron body
- face to face dimensions to BS EN 558:2008
- EN1092-2 flanges

DN	Connection	Code	Weight (kg)	Cv	Kv
DN65	2 ½"	15300	5.8	256.3	229.3
DN80	3"	15301	6.0	394.9	353.3
DN100	4"	15302	10.3	784.7	702.0
DN125	5"	15303	13.5	1336.6	1195.7
DN150	6"	15304	14.6	2075.3	1874.4
DN200	8"	15305	21.4	4101.6	3669.1

*Cv - flow rate in US GPM at a pressure drop of 1 psi.
*Kv - flow rate in m3 per hour at a pressure drop of 1 bar.

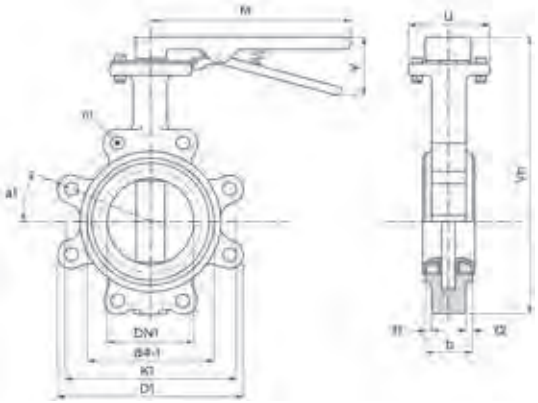

Dimensions (mm)

	a1	b	d4-1	D1	DN1	f1/f2	k1	M	n1	U	Vh	Y
DN65	45.0	50.0	142.0	180.0	DN68	3.0	142.0	205.0	8.0	66.0	332.0	43.0
DN80	45.0	54.0	160.0	200.0	DN80	5.0	160.0	205.0	8.0	66.0	359.0	43.0
DN100	45.0	56.0	182.0	220.0	DN100	7.0	182.0	205.0	8.0	66.0	384.0	55.0
DN125	45.0	62.0	210.0	255.0	DN125	7.0	210.0	205.0	8.0	90.0	409.0	55.0
DN150	45.0	63.0	240.0	293.0	DN150	8.0	240.0	205.0	8.0	95.0	446.0	55.0
DN200	45.0	65.0	300.0	330.0	DN200	11.0	300.0	205.0	8.0	95.0	505.0	89.0

Material specification

Nr	Component	Material
1	Body	Ductile iron
2	Shaft	Stainless steel
3	Disc	Stainless steel
4	Bushes up to 100mm	PTFE
5	Bushes up to 125mm	Bronze (Gunmetal)
6	"O" ring	EPDM
7	Liner	EPDM

Maximum pressure conditions

Size	Max Pressure (bar)	Min/Max Temperature (°C)	Test Pressure Shell (bar)	Test Pressure Seat (bar)	Max Pressure (psi)	Min/Max Temperature (°F)	Test Pressure Shell (psi)	Test Pressure Seat (psi)
DN65 to DN200	16.0	- 10°C + 120°C	24.0	17.5	232.1	14°F + 248°F	348.1	253.8

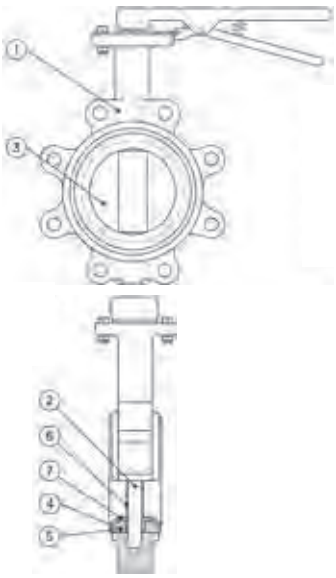

Pressure equipment directive category

All sizes classified SEP

Pressure & temperature ratings

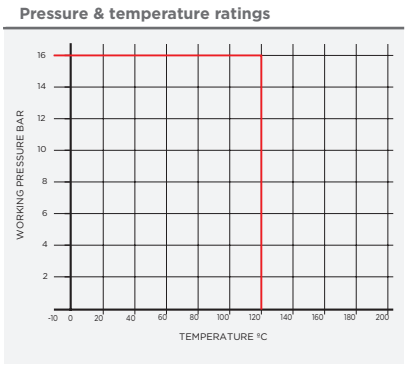

V905G Butterfly valve (2 x flange)

water heating

specification

- all sizes rated PN16
- stainless steel disc and stem
- quarter turn operation
- geared
- ductile iron body
- EPDM liner
- fully lugged to BS EN 593:2004
- face to face dimension to BS EN 558:2008

DN	Connection	Code	Weight (kg)	Cv	Kv
DN200	8"	15298	27.80	3003.9	2687.2
DN250•	10"	15306	42.00	6984.3	6247.8
DN300•	12"	15307	67.00	10790.3	9652.5
DN350	14"	15299	80.00	11415.5	10211.7
DN400	16"	15294	120.00	15698.2	14042.8
DN450	18"	15295	148.00	20791.5	18599.0
DN500	20"	15296	214.00	26733.4	23914.3
DN600	24"	15297	295.00	41301.4	36946.0

*Cv - flow rate in US GPM at a pressure drop of 1 psi.
*Kv - flow rate in m3 per hour at a pressure drop of 1 bar.
•WRAS approved

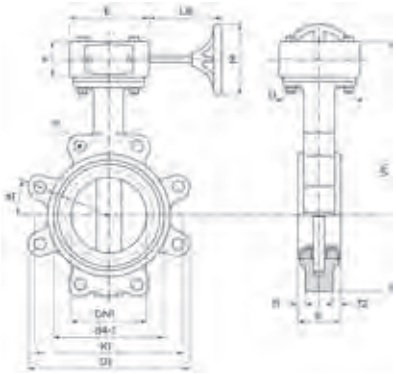

Dimensions (mm)

	a1	b	d4-1	D1	DN1	E	f1/f2	k1	LB	M	n1	U	Vh	Y
DN200	30.0	68.0	265.0	406.0	DN200	146.0	3.0	355.0	152.0	285.0	12.0	161.0	677.0	120.0
DN250	30.0	70.0	302.0	400.0	DN250	155.0	3.0	340.0	150.0	285.0	12.0	161.0	698.0	120.0
DN300	30.0	78.0	370.0	440.0	DN300	165.0	4.0	410.0	150.0	285.0	12.0	161.0	761.0	120.0
DN350	30.0	78.0	415.0	455.0	DN350	165.0	4.0	470.0	150.0	285.0	16.0	161.0	847.0	120.0
DN400	30.0	102.0	470.0	632.0	DN400	247.0	6.0	650.0	213.0	397.0	16.0	161.0	970.0	120.0
DN450	30.0	114.0	518.0	672.0	DN450	247.0	6.0	585.0	213.0	397.0	20.0	161.0	1012.0	120.0
DN500	30.0	127.0	568.0	740.0	DN500	357.0	8.0	650.0	246.0	397.0	20.0	161.0	1120.0	120.0
DN600	30.0	127.0	680.0	780.0	DN600	357.0	8.0	694.0	246.0	420.0	20.0	161.0	1200.0	120.0

Material specification

Nr	Component	Material
1	Body	Ductile iron
2	Shaft	Stainless steel
3	Disc	Stainless steel
4	Bushes up to 100mm	PTFE
5	Bushes up to 125mm	Bronze (Gunmetal)
6	"O" ring	EPDM
7	Liner	EPDM

Maximum pressure conditions

Size	Max Pressure (bar)	Min/Max Temperature (°C)	Test Pressure Shell (bar)	Test Pressure Seat (bar)	Max Pressure (psi)	Min/Max Temperature (°F)	Test Pressure Shell (psi)	Test Pressure Seat (psi)
DN200 to DN600	16.0	- 10°C + 120°C	24.0	17.5	232.1	14°F + 248°F	348.1	253.8

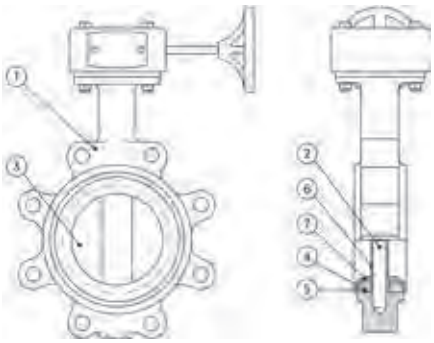

Pressure equipment directive category

All sizes classified SEP

Pressure & temperature ratings

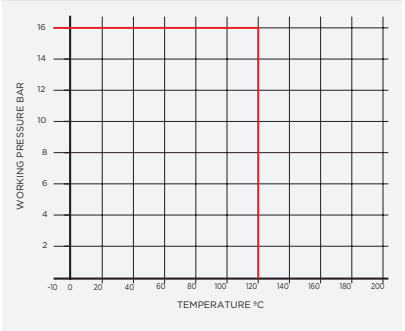

V906 Butterfly valve (2 x flange)

specification

- all sizes rated PN16
- stainless steel disc and stem
- quarter turn
- EPDM liner
- ductile iron body
- semi lugged to BS EN 593:2004
- face to face dimensions to BS EN 558:2008

DN	Connection	Code	Weight (kg)	Cv	Kv
DN65	2 ½"	15316	4.4	268.3	229.3
DN80	3"	15317	5.0	413.4	353.3
DN100	4"	15318	6.1	821.3	702.0
DN125	5"	15319	8.0	1399.0	1195.7
DN150	6"	15320	9.6	2193.1	1874.4
DN200	8"	15321	15.1	4292.9	3669.1

*Cv - flow rate in US GPM at a pressure drop of 1 psi.
*Kv - flow rate in m3 per hour at a pressure drop of 1 bar.

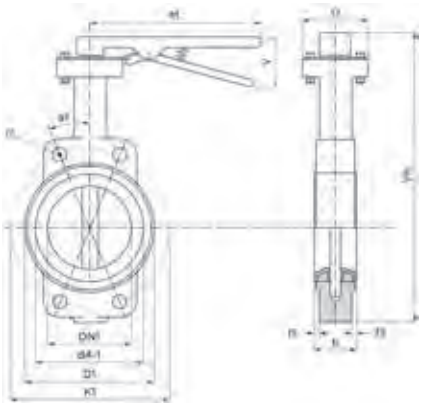

Dimensions (mm)

	a1	b	d4-1	D1	DN1	f1/f2	k1	M	n1	U	Vh	Y
DN65	68.0	46.0	118.0	140.0	DN65	13.0	160.0	200.0	4.0	56.0	251.0	43.0
DN80	68.0	46.0	132.0	200.0	DN80	12.0	240.0	200.0	4.0	56.0	276.0	43.0
DN100	68.0	52.0	156.0	220.0	DN100	14.0	260.0	290.0	4.0	70.0	317.0	55.0
DN125	68.0	56.0	184.0	250.0	DN125	15.0	290.0	290.0	4.0	70.0	346.0	55.0
DN150	68.0	56.0	211.0	285.0	DN150	15.0	320.0	290.0	4.0	70.0	371.0	55.0
DN200	68.0	60.0	266.0	340.0	DN200	15.0	380.0	450.0	4.0	94.0	457.0	89.0

Material specification

Nr	Component	Material
1	Body	Ductile iron
2	Shaft	Stainless steel
3	Disc	Stainless steel
4	Bushes up to 100mm	PTFE
5	Bushes up to 125mm	Bronze (Gunmetal)
6	"O" ring	EPDM
7	Liner	EPDM

Maximum pressure conditions

Size	Max Pressure (bar)	Min/Max Temperature (°C)	Test Pressure Shell (bar)	Test Pressure Seat (bar)	Max Pressure (psi)	Min/Max Temperature (°F)	Test Pressure Shell (psi)	Test Pressure Seat (psi)
DN65 to DN200	16.0	- 10°C + 120°C	24.0	17.5	232.1	14°F + 248°F	348.1	253.8

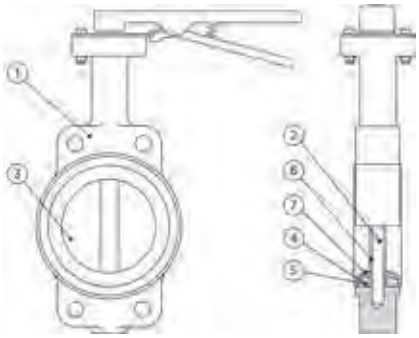

Pressure equipment directive category

All sizes classified SEP

Pressure & temperature ratings

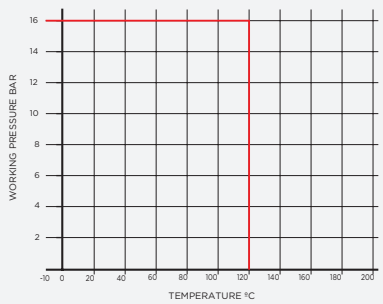

V906G Butterfly valve (2 x flange)

water heating

specification

- all sizes rated PN16
- stainless steel disc and stem
- quarter turn
- geared
- EPDM liner
- ductile iron body
- semi lugged to BS EN 593:2004
- face to face dimensions to BS EN 558:2008

DN	Connection	Code	Weight (kg)	Cv	Kv
DN250	10"	15322	31.5	7309.93	6247.8
DN300	12"	15323	50.5	11293.43	9652.5

*Geared wheel operation, V906G
*Cv - flow rate in US GPM at a pressure drop of 1 psi.
*Kv - flow rate in m3 per hour at a pressure drop of 1 bar.

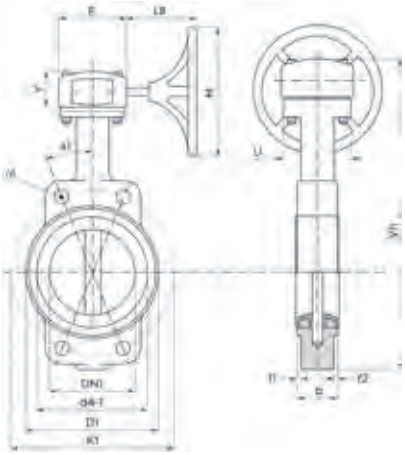

Dimensions (mm)

	a1	b	d4-1	D1	DN1	E	f1/f2	K1	LB	M	n1	U	Vh	Y
DN250	68.0	68.0	302.0	355.0	DN250	153.0	3.0	347.0	177.0	270.0	4.0	125.0	778.0	120.0
DN300	68.0	78.0	360.0	410.0	DN300	161.0	4.0	403.0	169.0	270.0	4.0	125.0	841.0	120.0

Material specification

Nr	Component	Material
1	Body	Ductile iron
2	Shaft	Stainless steel
3	Disc	Stainless steel
4	Bushes up to 100mm	PTFE
5	Bushes up to 125mm	Bronze (Gunmetal)
6	"O" ring	EPDM
7	Liner	EPDM

Maximum pressure conditions

Size	Max Pressure (bar)	Min/Max Temperature (°C)	Test Pressure Shell (bar)	Test Pressure Seat (bar)	Max Pressure (psi)	Min/Max Temperature (°F)	Test Pressure Shell (psi)	Test Pressure Seat (psi)
DN250 to DN300	16.0	- 10°C + 120°C	24.0	17.5	232.1	14°F + 248°F	348.1	253.8

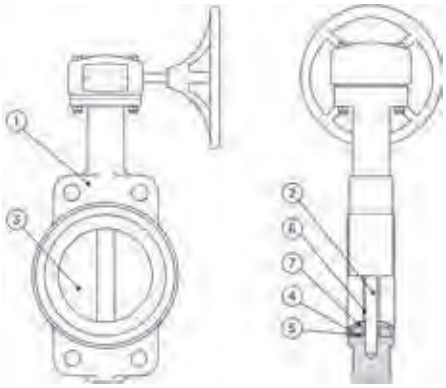

Pressure equipment directive category

All sizes classified SEP

Pressure & temperature ratings

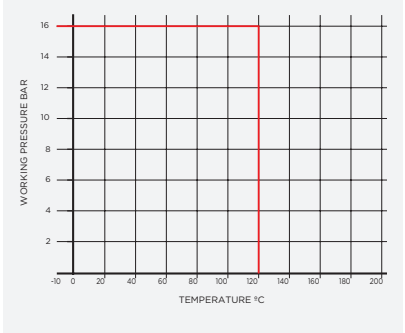

Pegler valve

check and strainer valves

1060A Swing check valve (2 x female thread)

steam water heating oil

specification

- BS5154 PN25 series B
- horizontal or vertical fixing (upward flow only)
- metal seat and swing type metal disc
- bronze (GM) body
- body arrow indicates direction of flow
- ISO7-1 taper thread formally BS EN 10226
- ISO 288G parallel thread formally BS 2779

DN	Connection	ISO7-1 Rc (taper) Code	ISO 228 (PT) Code	ANSI NPT (AT) (taper) Code	Weight (kg)
DN15	½"	122007	122047	122027	0.38
DN20	¾"	122008	122048	122028	0.58
DN25	1"	122009	122049	122029	0.86
DN32	1 ¼"	122010	122050	122030	1.26
DN40	1 ½"	122011	122051	122031	1.66
DN50	2"	122012	122052	122032	2.66
DN65	2 ½"	122013	122053	122033	3.52
DN80	3"	122014	122054	122034	4.48
DN100	4"	122015	122055		8.38

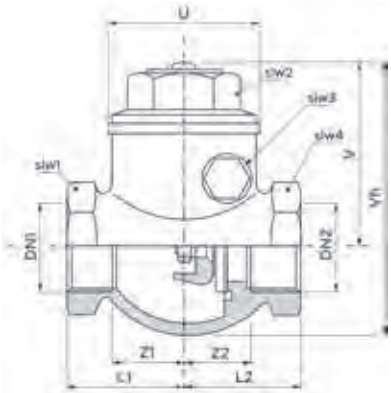

Dimensions (mm)

	Do1/Do2	DN1/DN2	L1/L2	slw1	slw2	slw3	slw4	U	V	Vh	Z1/Z2
DN15	30.0	DN15	31.0	30.0	22.0	8.0	30.0	32.0	45.0	65.0	22.0
DN20	36.0	DN20	38.0	36.0	27.0	8.0	36.0	38.0	55.0	78.0	27.0
DN25	43.0	DN25	42.0	37.0	31.0	8.0	37.0	45.0	50.0	86.0	30.0
DN32	52.0	DN32	47.0	45.0	38.0	8.0	45.0	54.0	65.0	96.0	34.0
DN40	62.0	DN40	47.0	54.0	46.0	8.0	54.0	64.0	65.0	111.0	33.0
DN50	75.0	DN50	63.0	65.0	55.0	8.0	65.0	77.0	90.0	133.0	44.0
DN65	95.0	DN65	74.0	82.0	70.0	8.0	82.0	97.0	111.0	162.0	53.0
DN80	114.0	DN80	88.0	99.0	84.0	8.0	99.0	116.0	125.0	187.0	62.0
DN100	140.0	DN100	111.0	121.0	103.0	8.0	121.0	142.0	130.0	205.0	79.0

Material specification

Nr	Component	Material
1	Body	Bronze (GM)
2	Body cap	Forged brass (½" to 2") Gunmetal (2 ¼" to 4")
3	Disc	Bronze (GM)
4	Swinger	Brass bar (½" to 1") Gunmetal (1 ¼" to 4")
5	Swinger pin	Brass bar
6	Swinger pin cap	Brass bar (2 ½" to 4")
7	Nut	Brass bar
8	Rating disc	Tinned iron sheet

Maximum pressure conditions

Size	Max Pressure (bar)	Min/Max Temperature (°C)	Test Pressure Shell (bar)	Test Pressure Seat (bar)	Max Pressure (psi)	Min/Max Temperature (°F)	Test Pressure Shell (psi)	Test Pressure Seat (psi)
½" to 2"	25.0	- 10°C + 186°C	37.5	27.5	362.6	14°F + 366.8°F	543.9	398.9
Size	**Max Pressure (bar)**	**Min/Max Temperature (°C)**	**Shell (bar)**	**Seat (bar)**	**Max Pressure (psi)**	**Min/Max Temperature (°F)**	**Shell (psi)**	**Seat (psi)**
2 ½" to 4"	16.0	- 10°C + 120°C	24.0	17.5	232.1	14°F + 366.8°F	348.1	253.8

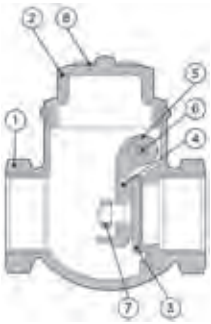

Pressure equipment directive category

All sizes classified SEP

Pressure & temperature ratings

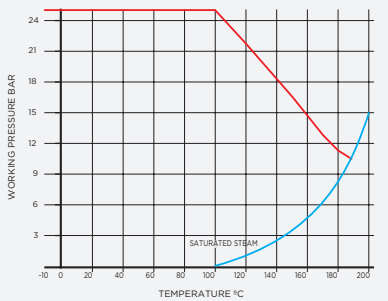

1039 Lift check valve (2 x female thread)

water oil

specification

- BS5154 PN32 series B
- horizontal fixing
- metal seat and prong type metal disc
- body arrow indicates direction of flow
- bronze (gunmetal) body
- taper threaded BS EN 10226 (ISO 7-1)
- BS2779 parallel thread (PT)

DN	Connection	ISO7-1 Rc (taper)	ISO 288 (PT)	Total (kg)
DN15	½"	119007	119047	0.28
DN20	¾"	119008	119048	0.44
DN25	1"	119009	119049	0.68
DN32	1 ¼"	119010	119050	1.14
DN40	1 ½"	119011	119051	1.46
DN50	2"	119012	119052	2.24

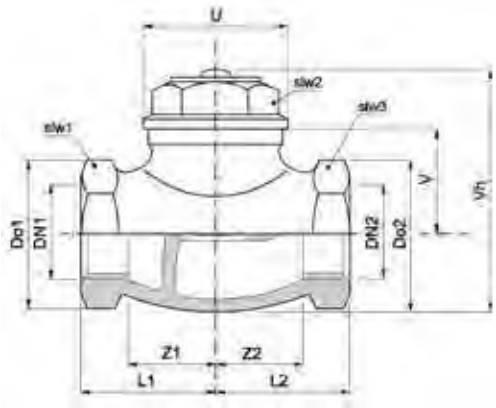

Dimensions (mm)

	Do1/Do2	DN1/DN2	L1/L2	slw1/slw3	slw2	U	V	Vh	Z1/Z2
DN15	29.0	½"	29.0	29.0	22.0	31.0	34.0	52.0	19.0
DN20	36.0	¾"	33.0	36.0	22.0	33.0	40.0	57.0	22.0
DN25	42.0	1"	39.0	42.0	22.0	40.0	45.0	73.0	27.0
DN32	51.0	1 ¼"	45.0	51.0	26.0	49.0	56.0	85.0	30.0
DN40	57.0	1 ½"	50.0	57.0	29.0	59.0	62.0	95.0	36.0
DN50	72.0	2"	60.0	72.0	36.0	69.0	67.0	106.0	42.0

Material specification

Nr	Component	Material
1	Body	Bronze (Gunmetal)
2	Cap	Forged brass (½" to 1 ¼") Gravity die cast brass (1 ½" to 2")
3	Valve	Brass
4	Rating disc	Aluminium

Maximum pressure conditions

Size	Max Pressure (bar)	Min/Max Temperature (°C)	Test Pressure Shell (bar)	Test Pressure Seat (bar)	Max Pressure (psi)	Min/Max Temperature (°F)	Test Pressure Shell (psi)	Test Pressure Seat (psi)
½" to 2"	32.0	- 10°C + 198°C	48.0	35.2	464.1	14°F + 230°F	696.1	510.5

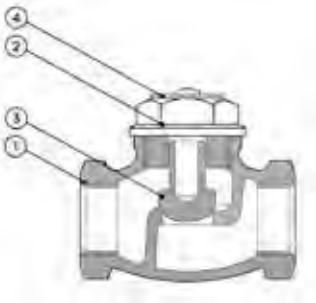

Pressure equipment directive category

All sizes classified SEP

Pressure & temperature ratings

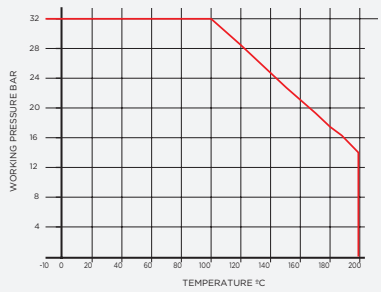

10638 Swing check valve (2 x female thread)

water oil

specification

- BS5154 PN20 series B
- horizontal or vertical fixing (upward flow only)
- metal seat and swing type metal disc
- body arrow indicates direction of flow
- bronze (gunmatel) body
- taper threaded BS EN 10226 (ISO 7-1)
- ANSI (NPT) American taper thread (AT)
- BS2779 parallel thread (PT)

DN	Connection	ISO7-1 Rc (taper)	ISO 288 (PT) parallel	Total (kg)	Cv	Kv
DN15	½"	122360	122370	0.25	9.98	8.53
DN20	¾"	122361	122371	0.40	18.19	15.55
DN25	1"	122362	122372	0.60	30.74	26.27
DN32	1 ¼"	122363	122373	0.87	54.39	46.49
DN40	1 ½"	122364	122374	1.16	75.78	64.77
DN50	2"	122365	122375	1.80	131.32	112.24

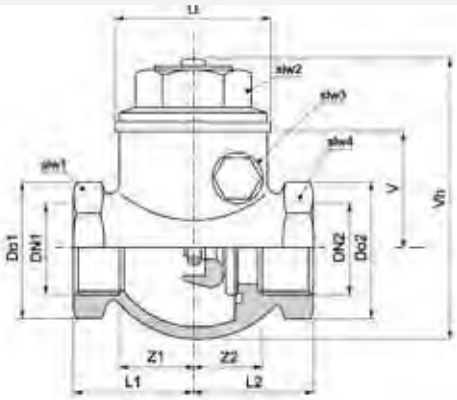

Dimensions (mm)

	Do1/Do2	DN1/DN2	L1/L2	slw1/slw3	slw2	U	V	Vh	Z1/Z2
DN15	32.0	½"	29.0	28.0	23.0	31.0	37.0	53.0	20.0
DN20	40.0	¾"	33.0	35.0	30.0	38.0	43.0	63.0	24.0
DN25	50.0	1"	38.0	43.0	35.0	41.0	49.0	74.0	27.0
DN32	60.0	1 ¼"	44.0	52.0	42.0	51.0	58.0	88.0	32.0
DN40	67.0	1 ½"	48.0	58.0	48.0	58.0	63.0	96.0	33.0
DN50	82.0	2"	56.0	71.0	58.0	73.0	72.0	113.0	41.0

Material specification

Nr	Component	Material
1	Body	Bronze Gunmetal)
2	Hinge nut	Brass CW614N
3	Disc	Bronze (Gunmetal) CC491K
4	Hinge	Brass CW617N
5	Hinge pin	Stainless steel
6	Cap	Bronze (Gunmetal) CC491K
7	Name plate	Aluminium
8	Rivet	Steel

Maximum pressure conditions

Size	Max Pressure (bar)	Min/Max Temperature (°C)	Test Pressure Shell (bar)	Test Pressure Seat (bar)	Max Pressure (psi)	Min/Max Temperature (°F)	Test Pressure Shell (psi)	Test Pressure Seat (psi)
½" to 2"	20.0	- 10°C + 180°C	30.0	22.0	290.1	14°F + 356°F	435.1	318.1

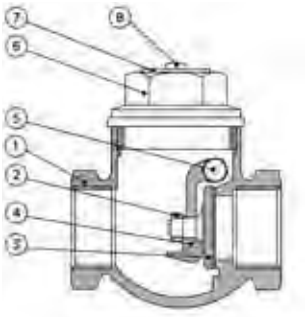

Pressure equipment directive category

All sizes classified SEP

Pressure & temperature ratings

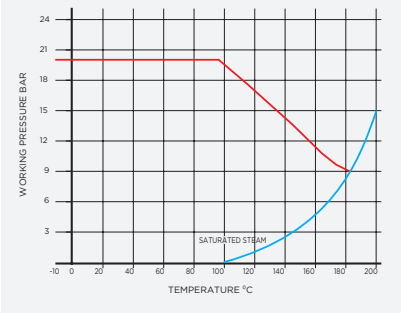

steam water heating oil

1062 Swing check valve (2 x female thread)

specification

- BS5154 PN25 series B
- horizontal or vertical fixing (upward flow only)
- metal seat and swing type metal disc
- body arrow indicates direction of flow
- brass body
- taper threaded BS EN 10226 (ISO 7-1)
- ANSI (NPT) American taper thread (AT)

DN	Connection	ISO7-1 Rc (taper)	ISO 288 (PT) parallel	Total (kg)
DN15	½"	124007	124013	0.27
DN20	¾"	124008	124014	0.48
DN25	1"	124009	124015	0.72

Flow rates m³/h

Size	Flow l/s	Kv m³/h
½"	0.04	1.80
	0.10	3.70
	0.20	5.10
	0.40	5.70
¾"	0.04	2.70
	0.10	5.50
	0.40	13.60
	1.00	15.30
1"	0.01	7.70
	0.20	13.90
	0.30	18.40
	1.00	25.30

*Kv - flow rate in m3 per hour at a pressure drop of 1 bar.
MINIMUM OPERATING CONDITIONS Sizes ½" to 1" require 0.5 bar (7.25 psi) minimum line pressure with a defferential pressure of 1 to 1.5 psi to allow the valve to function

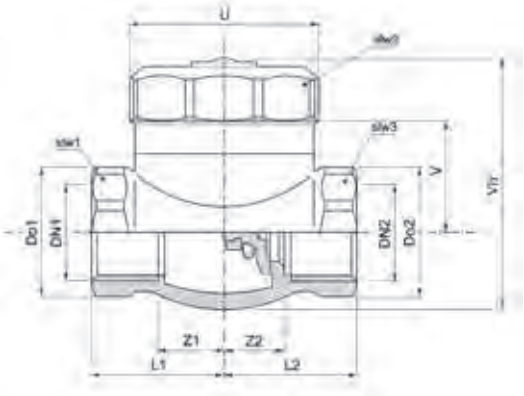

Dimensions (mm)

	Do1/Do2	DN1/DN2	L1/L2	slw1/slw3	slw2	U	V	Vh	Z1/Z2
DN15	27.0	½"	29.0	27.0	38.0	41.0	34.0	49.0	15.0
DN20	33.0	¾"	36.0	33.0	48.0	52.0	39.0	58.0	21.0
DN25	40.0	1"	42.0	40.0	57.0	62.0	50.0	74.0	24.0

Material specification

Nr	Component	Material
1	Body	Forged brass (½" to ¾") Gravity die cast brass (1")
2	Cap	Forged brass
3	Swinger	Brass bar
4	Swinger pin	Brass bar
5	Bush	Brass bar
6	Valve	Brass bar
7	Nut	Brass bar
8	Rating disc	Aluminium

Maximum pressure conditions

Size	Max Pressure (bar)	Min/Max Temperature (°C)	Test Pressure Shell (bar)	Test Pressure Seat (bar)	Max Pressure (psi)	Min/Max Temperature (°F)	Test Pressure Shell (psi)	Test Pressure Seat (psi)
½" to 1"	25.0	- 10°C + 186°C	37.5	27.5	362.6	14°F + 366.8°F	543.9	398.9

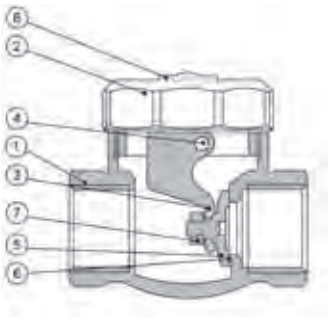

Pressure equipment directive category

All sizes classified SEP

Pressure & temperature ratings

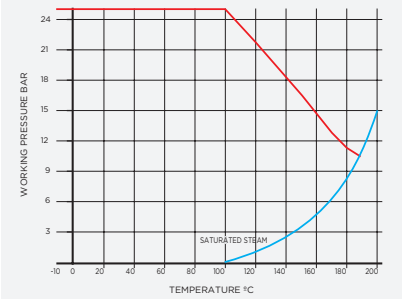

1063 Spring action check valve (2 x female thread)

water heating

specification

- forged brass body
- stainless steel springs
- ABS pin and washer
- BS 2779 Parallel thread (PT)
- brass body
- PN12 ½" to ¾"
- PN10 1" to 2"
- PN8 2 ½" to 4"

DN	Connection	ISO 288 (PT)	Total (kg)
DN15	½"	124121	0.12
DN20	¾"	124122	0.23
DN25	1"	124123	0.21
DN32	1 ¼"	124124	0.33
DN40	1 ½"	124125	0.49
DN50	2"	124126	0.63
DN65	2 ½"	124127	1.18
DN80	3"	124128	1.91
DN100	4"	124129	2.91

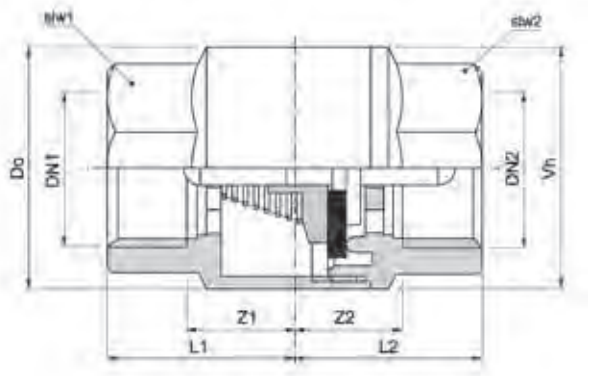

Dimensions (mm)

	Do1/Do2	DN1/DN2	L1/L2	slw1/slw2	Vh	Z1/Z2
DN15	28.0	½"	25.0	28.0	28.0	17.0
DN20	35.0	¾"	29.0	35.0	35.0	19.0
DN25	40.0	1"	30.0	40.0	45.0	20.0
DN32	50.0	1 ¼"	33.0	50.0	56.0	22.0
DN40	57.0	1 ½"	38.0	57.0	67.0	25.0
DN50	70.0	2"	43.0	70.0	79.0	29.0
DN65	87.0	2 ½"	50.0	87.0	98.0	33.0
DN80	95.0	3"	55.0	95.0	112.0	30.0
DN100	129.0	4"	57.0	129.0	138.0	38.0

Material specification

Nr	Component	Material
1	Pin	ABS
2	Pin washer	ABS
3	Body	Brass
4	Sealing washer	EPDM rubber
5	Spring	Stainless steel 18/8

Maximum pressure conditions

Size	Max Pressure (bar)	Min/Max Temperature (°C)	Test Pressure Shell (bar)	Test Pressure Seat (bar)	Max Pressure (psi)	Min/Max Temperature (°F)	Test Pressure Shell (psi)	Test Pressure Seat (psi)
½" to ¾"	12.0	- 10°C + 90°C	18.0	13.2	174.0	14°F + 194°F	261.1	191.4
1" to 2"	10.0	- 10°C + 90°C	15.0	11.0	145.0	14°F + 194°F	217.6	159.5
2 ½" to 4"	8.0	- 10°C + 90°C	12.0	8.8	116.0	14°F + 194°F	174.0	127.6

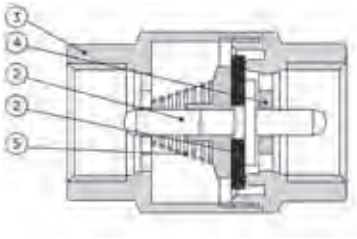

Pressure equipment directive category

All sizes classified SEP

Pressure & temperature ratings

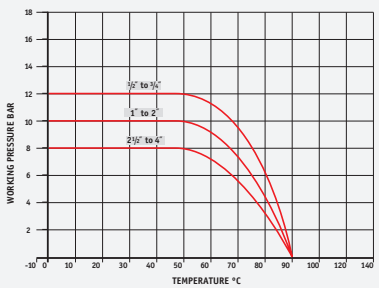

1064 Foot valve (2 x female thread)

water heating

specification

- female end
- filter end
- forged brass body
- stainless steel spring
- ABS pin and washer
- EPDM sealing washer
- stainless steel screw in filter
- brass body
- ANSI (NPT) American taper thread (AT)
- PN12 ½" to ¾"
- PN10 1" to 2"
- PN8 2 ½" to 4"

DN	Connection	ISO 228 (PT)	ANSI (NTP) (taper) (AT)	Total (kg)
DN15	½"	124271	124291	0.13
DN20	¾"	124272	124292	0.20
DN25	1"	124273	124293	0.27
DN32	1 ¼"	124274	124294	0.41
DN40	1 ½"	124275	124295	0.62
DN50	2"	124276	124296	0.91
DN65	2 ½"	124277		1.46
DN80	3"	124278		2.07
DN100	4"	124279		3.02

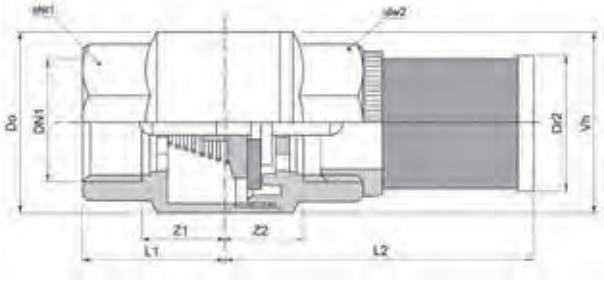

Dimensions (mm)

	Do1	Dr2	DN1/DN2	L1	L2	slw1/slw2	Vh	Z1/Z2
DN15	26.0	24.0	½"	24.0	56.0	24.0	32.0	13.0
DN20	32.0	30.0	¾"	29.0	65.0	30.0	37.0	15.0
DN25	40.0	37.0	1"	29.0	72.0	37.0	45.0	16.0
DN32	50.0	44.0	1 ¼"	33.0	85.0	46.0	55.0	18.0
DN40	56.0	54.0	1 ½"	38.0	96.0	52.0	67.0	21.0
DN50	70.0	64.0	2"	35.0	121.0	65.0	78.0	26.0
DN65	87.0	77.0	2 ½"	50.0	128.0	80.0	98.0	30.0
DN80	103.0	87.0	3"	53.0	147.0	85.0	112.0	31.0
DN100	130.0	115.0	4"	57.0	158.0	120.0	140.0	31.0

Material specification

Nr	Component	Material
1	Pin	ABS
2	Pin washer	ABS
3	Body	Brass
4	Sealing washer	EPDM rubber
5	Spring	Stainless steel 18/8
6	Filter	Stainless steel 18/8
7	Filter/body connection	ABS

Stainless steel mesh

Size	Mesh	Hole Ø mm
½" to ¾"	16.0	1.2
1" to 2"	12.0	1.6
2 ½" to 4"	10.0	1.8

Maximum pressure conditions

Size	Max Pressure (bar)	Min/Max Temperature (°C)	Test Pressure Shell (bar)	Test Pressure Seat (bar)	Max Pressure (psi)	Min/Max Temperature (°F)	Test Pressure Shell (psi)	Test Pressure Seat (psi)
½" to ¾"	12.0	- 10°C + 90°C	18.0	13.2	174.0	14°F + 194°F	261.1	191.4
1" to 2"	10.0	- 10°C + 90°C	15.0	11.0	145.0	14°F + 194°F	217.6	159.5
2 ½" to 4"	8.0	- 10°C + 90°C	12.0	8.8	116.0	14°F + 194°F	174.0	127.6

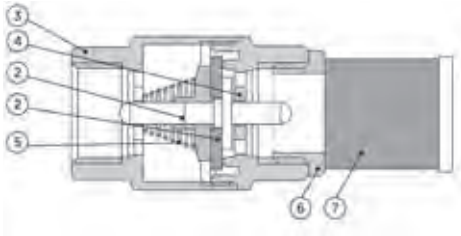

Pressure equipment directive category

All sizes classified SEP

Pressure & temperature ratings

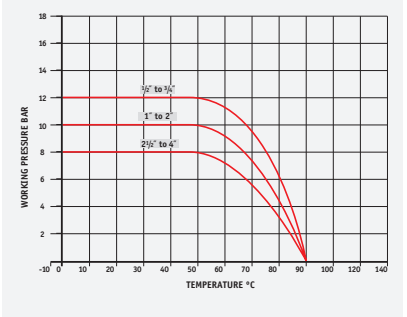

K4424 Check valve (2 x compression ends)

water

specification

- EN13959:2004
- type E D
- compression ends
- spring assisted closure
- non return valve
- DZR brass body

Compression connections EN1254-2	Code DZR	Code DZR CP	Total (kg)	Kv
15mm	42068	42090	0.18	3.80
22mm	42069		0.23	7.30
28mm	42070		0.49	10.50

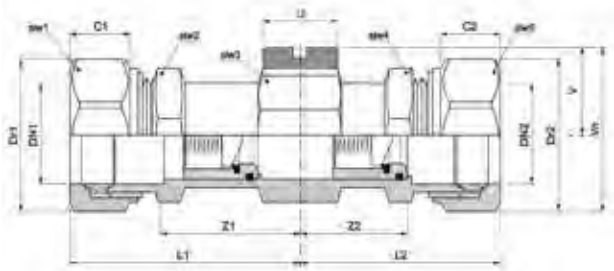

Dimensions (mm)

	C1/C2	Dr1/Dr2	DN1/DN2	L1/L2	slw1/slw5	slw2/slw4	slw3	U	V	Vh	Z1/Z2
15mm	16.0	24.0	15mm	55.0	24.0	28.0	21.0	21.0	15.0	29.0	29.0
22mm	14.0	32.0	22mm	49.0	32.0	36.0	27.0	19.0	18.0	37.0	25.0
28mm	16.0	38.0	28mm	55.0	38.0	44.0	32.0	21.0	21.0	43.0	29.0

Material specification

Nr	Component	Material
1	Body, chrome plated	DZR brass
2	Check valve	Nylon
3	Test plug	DZR brass
4	Test plug seal "O" ring	WRAS approved elastnor
5	Circlip	Stainless steel
6	Washer	DZR brass
7	Compression nut, chrome plated	Brass
8	Compression ring	Brass

Maximum pressure conditions

Size	Max Pressure (bar)	Min/Max Temperature (°C)	Test Pressure Shell (bar)	Test Pressure Seat (bar)	Max Pressure (psi)	Min/Max Temperature (°F)	Test Pressure Shell (psi)	Test Pressure Seat (psi)
15 to 28mm	10.0	4°C + 95°C	15.0	11.0	145.0	39.2°F + 203°F	217.6	159.5

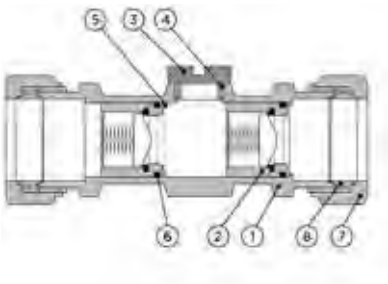

Pressure equipment directive category

All sizes classified SEP

Pressure & temperature ratings

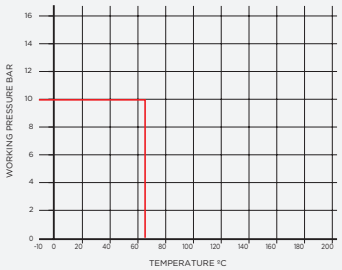

K4426 Check valve (2 x female ends)

water

specification

- EN13959: 2004
- type ED
- female ends
- spring assisted closure
- non return valves
- DZR brass body

DN	Connection	ISO 288/1 (PT)	Total (kg)	Kv
DN15	½"	42071	0.15	3.85
DN20	¾"	42072	0.24	7.30
DN25	1"	42073	0.42	10.50
DN32	1 ¼"	42074	0.61	17.30
DN40	1 ½"	42075	0.85	26.40
DN50	2"	42076	1.66	43.40

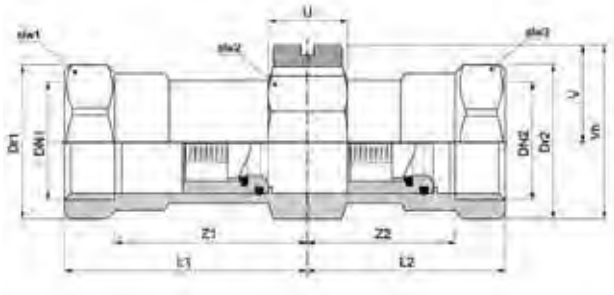

Dimensions (mm)

	Do1/Do2	DN1/DN2	L1/L2	slw1/slw3	slw2	U	V	Vh	Z1/Z2
DN15	29.0	½"	40.0	25.0	26.0	17.0	17.0	31.0	30.0
DN20	36.0	¾"	46.0	31.0	31.0	18.0	20.0	38.0	37.0
DN25	45.0	1"	53.0	39.0	39.0	19.0	24.0	47.0	40.0
DN32	54.0	1 ¼"	64.0	47.0	47.0	20.0	28.0	55.0	48.0
DN40	60.0	1 ½"	75.0	52.0	52.0	18.0	32.0	62.0	58.0
DN50	76.0	2"	100.0	66.0	66.0	19.0	37.0	76.0	78.0

Material specification

Nr	Component	Material
1	Body	DZR brass
2	Test plug	DZR brass
3	Non-return valve	Nylon
4	Test plug seal "O" ring	WRAS approved elastnor
5	Circlip	Stainless steel
6	Washer	DZR brass

Maximum pressure conditions

Size	Max Pressure (bar)	Min/Max Temperature (°C)	Test Pressure Shell (bar)	Test Pressure Seat (bar)	Max Pressure (psi)	Min/Max Temperature (°F)	Test Pressure Shell (psi)	Test Pressure Seat (psi)
½" to 2"	10.0	4°C + 95°C	15.0	11.0	145.0	39.2°F + 203°F	217.6	159.5

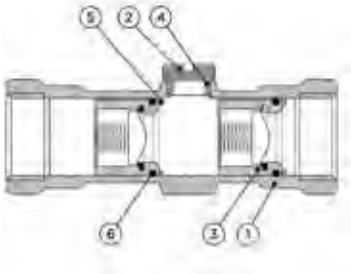

Pressure equipment directive category

All sizes classified SEP

Pressure & temperature ratings

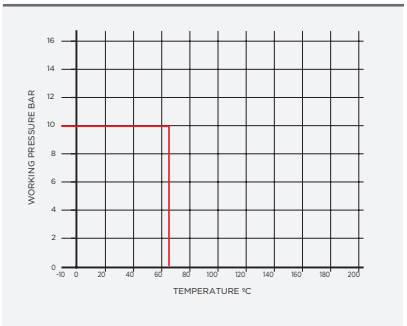

K424 Check valve

specification

- EN 13959 type EB
- compression ends
- spring assisted closure
- DZR brass body

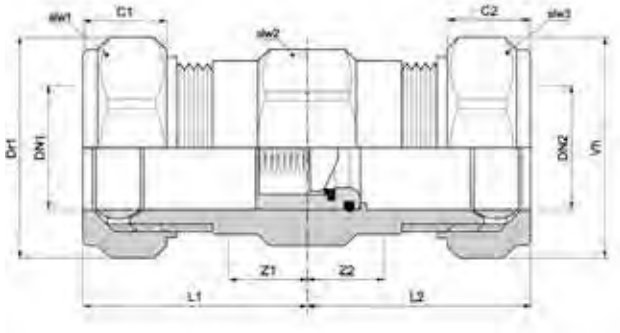

Compression connections EN1254-2	Code	Total (kg)	Kv
15mm	42062	1.09	4.00
22mm	42063	1.09	6.00
28mm	42064	1.86	10.00

Dimensions (mm)

	C1	Dr1	DN1/DN2	L1/L2	slw1/slw3	slw2	Vh	Z1/Z2
15mm	12.0	24.0	15mm	30.0	24.0	22.0	24.0	18.0
22mm	14.0	32.0	22mm	34.0	32.0	31.0	32.0	20.0
28mm	15.0	39.0	28mm	44.0	39.0	36.0	39.0	29.0

Material specification

Nr	Component	Material
1	Body	DZR brass
2	Non-return valve	Nylon
3	Circlip	Stainless steel
4	Washer	DZR brass
5	Compression nut	Brass
6	Compression ring	Brass

Maximum pressure conditions

Size	Max Pressure (bar)	Min/Max Temperature (°C)	Test Pressure Shell (bar)	Test Pressure Seat (bar)	Max Pressure (psi)	Min/Max Temperature (°F)	Test Pressure Shell (psi)	Test Pressure Seat (psi)
15 to 28mm	10.0	-4°C + 95°C	15.0	11.0	145.0	39.2°F + 203°F	217.6	159.5

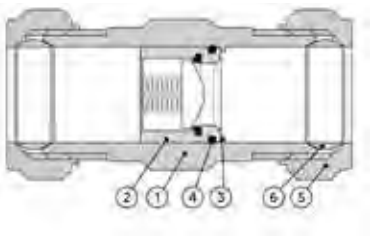

Pressure equipment directive category

All sizes classified SEP

Pressure & temperature ratings

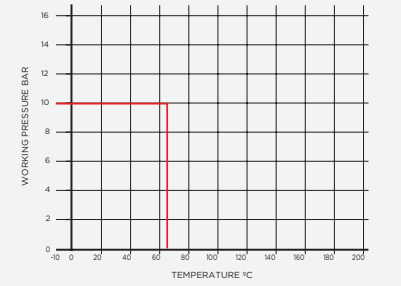

K426 Check valve

specification

- EN13959:2004 Type EB
- spring assisted closure
- non return valves
- DZR brass body

DN	Connection	ISO 288 (PT)	Total (kg)	Kv
DN15	½"	42065	0.10	4.00
DN20	¾"	42066	0.18	7.00
DN25	1"	42067	0.36	10.00
DN32	1 ¼"	42077	0.48	0.00
DN40	1 ½"	42078	0.62	0.00
DN50	2"	42079	1.32	0.00

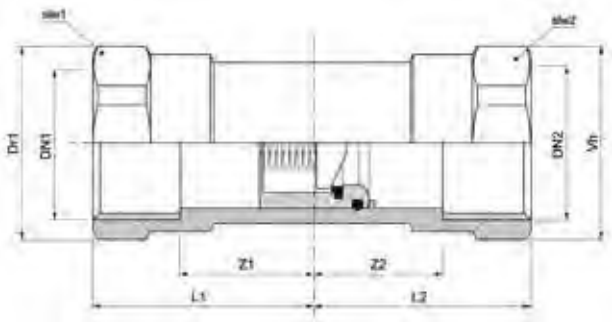

Dimensions (mm)

	Do1	DN1/DN2	L1/L2	slw1/slw2	Vh	Z1/Z2
DN15	30.0	½"	32.0	28.0	30.0	25.0
DN20	36.0	¾"	35.0	31.0	36.0	27.0
DN25	44.0	1"	47.0	38.0	44.0	35.0
DN32	53.0	1 ¼"	51.0	46.0	53.0	35.0
DN40	60.0	1 ½"	58.0	52.0	60.0	41.0
DN50	75.0	2"	75.0	65.0	75.0	53.0

Material specification

Nr	Component	Material
1	Body	DZR brass
2	Non-return valve	Nylon
3	Circlip	Stainless steel
4	Washer	DZR brass

Maximum pressure conditions

Size	Max Pressure (bar)	Min/Max Temperature (°C)	Test Pressure Shell (bar)	Test Pressure Seat (bar)	Max Pressure (psi)	Min/Max Temperature (°F)	Test Pressure Shell (psi)	Test Pressure Seat (psi)
½" to 2"	10.0	-4°C + 95°C	15.0	11.0	145.0	39.2°F + 203°F	217.6	159.5

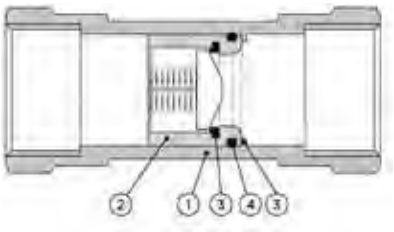

Pressure equipment directive category

All sizes classified SEP

Pressure & temperature ratings

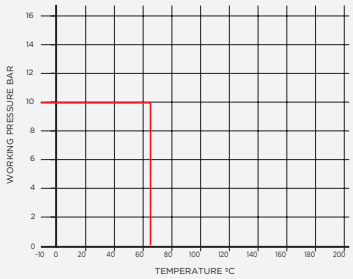

V909 Wafer pattern check valve

water heating

specification

- all sizes rated PN16
- self-acting, spring assisted, closure
- dual plate wafer pattern
- cast iron body
- BS EN 12334:2001
- for use with flanges to BS EN 1092-2
- face to face dimensions to 35EN 558-1

DN	Connection	Code	Weight (kg)
65mm	2 ½"	15398	2.3
80mm	3"	15399	3.2
100mm	4"	15400	4.4
125mm	5"	15401	6.7
150mm	6"	15402	9.2
200mm	8"	15403	14.8
250mm	10"	15404	25.5
300mm	12"	15405	40.7
350mm	14"	15427	55.0
450mm	18"	15429	107.0

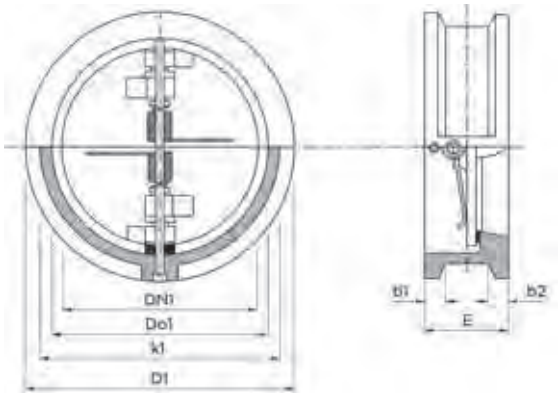

Dimensions (mm)

	b1/b2	D1	Do1	DN1	E	H	k1
65mm	9.0	126.0	108.0	DN65	46.0	63.0	78.0
80mm	11.0	141.0	118.0	DN80	57.0	71.0	90.0
100mm	13.0	161.0	135.0	DN100	64.0	81.0	115.0
125mm	14.0	191.0	163.0	DN125	70.0	96.0	141.0
150mm	15.0	217.0	187.0	DN150	76.0	109.0	170.0
200mm	18.0	272.0	236.0	DN200	89.0	136.0	210.0
250mm	23.0	327.0	281.0	DN250	114.0	164.0	273.0
300mm	23.0	382.0	336.0	DN300	114.0	191.0	324.0
350mm	25.0	442.0	386.0	DN350	184.0	221.0	356.0
450mm	30.0	494.0	506.0	DN450	191.0	249.0	406.0

Material specification

Nr	Component	Material
1	Body	Cast iron
2	Hinge pin	Stainless steel
3	Disc	Stainless steel
4	Seat	NBR
5	Stop pin	Stainless steel
6	Pin retainers	Stainless steel
7	ID plate	Aluminium
8	Spring	Stainless steel
9	Washer	PTFE
10	Gasket	EPDM

Maximum pressure conditions

Size	Max Pressure (bar)	Min/Max Temperature (°C)	Test Pressure Shell (bar)	Test Pressure Seat (bar)	Max Pressure (psi)	Min/Max Temperature (°F)	Test Pressure Shell (psi)	Test Pressure Seat (psi)
DN65 to DN450	16.0	- 10°C + 120°C	24.0	17.5	232.1	14°F + 248°F	348.1	253.8

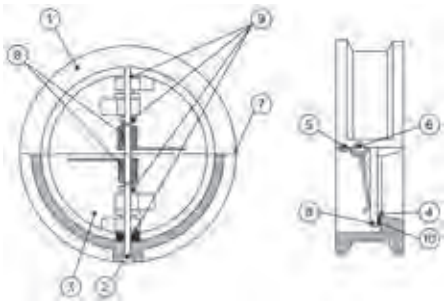

Pressure equipment directive category

All sizes classified SEP

Pressure & temperature ratings

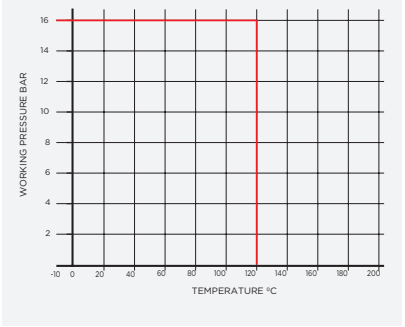

V914 Swing check valve (2 x flange)

heating

specification

- all sizes rated PN16
- horizontal or vertical fixing (upward flow only)
- bronze seat and disc facing
- BS EN 12334:2001
- cast iron body and disc
- cast iron cover
- gasket - graphite non asbestos

DN	Connection	Code	Weight (kg)
DN65	2 ½"	15378	17.3
DN80	3"	15379	141.5
DN100	4"	15380	37.5
DN125	5"	15381	40.9
DN150	6"	15382	51.7
DN200	8"	15383	120.0
DN250	10"	15384	218.0
DN300	12"	15385	218.0

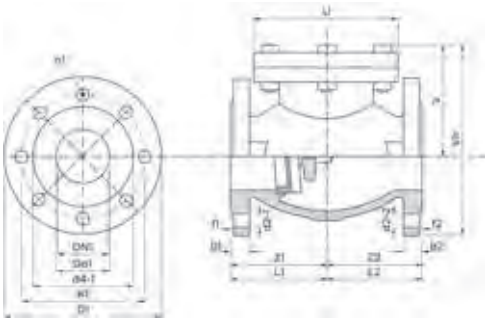

Dimensions (mm)

	b1/b2	d2-1	d2-2	f1/f2	L1/L2	U	V	Vh	Z1/Z2
DN65	20.0	19.0	19.0	3.0	108.0	185.0	132.0	225.0	108.0
DN80	20.0	19.0	19.0	3.0	120.0	200.0	141.0	242.0	120.0
DN100	22.0	20.0	20.0	3.0	146.0	220.0	163.0	273.0	146.0
DN125	22.0	20.0	20.9	3.0	165.0	250.0	197.0	322.0	165.0
DN150	24.0	20.0	20.0	3.0	177.0	285.0	212.0	355.0	177.0
DN200	26.0	21.0	21.0	3.0	247.0	340.0	257.0	427.0	247.0
DN250	29.0	21.0	21.0	3.0	311.0	405.0	298.0	501.0	311.0
DN300	32.0	25.0	25.0	3.0	349.0	460.0	330.0	561.0	349.0

	a1	D1	DN1	Do1	d4-1	k1	n1
DN65	22.5	185.0	DN65	67.0	122.0	195.0	8.0
DN80	22.5	200.0	DN80	82.0	138.0	215.0	8.0
DN100	22.5	220.0	DN100	102.0	158.0	240.0	8.0
DN125	22.5	250.0	DN125	127.0	188.0	275.0	8.0
DN150	22.5	285.0	DN150	152.0	212.0	315.0	8.0
DN200	22.5	340.0	DN200	202.0	268.0	375.0	8.0
DN250	22.5	405.0	DN250	252.0	320.0	447.0	8.0
DN300	22.5	460.0	DN300	302.0	370.0	505.0	8.0

Material specification

Nr	Component	Material	Nr	Component	Material
1	Body	Cast iron	9	Hinge pin	Stainless steel
2	Body seating	Bronze (GM)	10	Hinge pin plug	Brass
3	Disc	Cast iron	11	Hinge	Ductile iron
4	Disc assembly	Cast iron	12	Stop pin	Stainless steel
5	Disc facing ring	Bronze (GM)	13	Seat	EPDM
6	Disc nut	Brass	14	Seat ring	Bronze (GM)
7	Cover	Cast iron	15	Gasket	Asbestos free
8	Cover gasket	Graphite non-asbestos	16	Springs	Stainless steel

Maximum pressure conditions

Size	Max Pressure (bar)	Min/Max Temperature (°C)	Test Pressure Shell (bar)	Test Pressure Seat (bar)	Max Pressure (psi)	Min/Max Temperature (°F)	Test Pressure Shell (psi)	Test Pressure Seat (psi)
DN65 to DN300	16.0	- 10°C + 120°C	24.0	17.5	232.1	14°F + 248°F	348.1	253.8

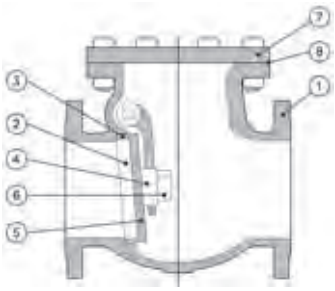

Pressure equipment directive category

All sizes classified SEP

Pressure & temperature ratings

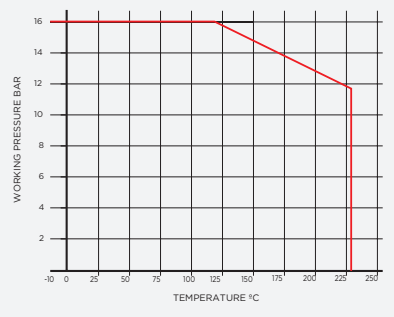

1059PT Y pattern strainer (female ends)

water heating

specification

- ½" to 2" PN20
- 2 ½" to 4" PN16
- ISO 228 (BS2779)
- brass body

DN	Connection	ISO 288 (PT)	Total (kg)
DN15	½"	120011	0.14
DN20	¾"	120012	0.20
DN25	1"	120013	0.38
DN32	1 ¼"	120014	0.56
DN40	1 ½"	120015	0.80
DN50	2"	120016	1.10
DN65	2 ½"	120017	1.95
DN80	3"	120018	3.05
DN100	4"	120019	5.65

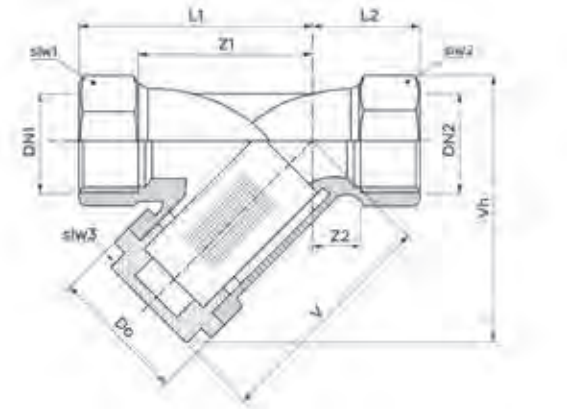

Dimensions (mm)

	Do1/Do2	Do3	DN1/DN2	L1	L2	slw1/slw2	slw3	V	Vh	Z1	Z2
DN15	25.0	30.0	½"	40.0	18.0	25.0	20.0	47.0	52.0	28.0	6.0
DN20	31.0	35.0	¾"	50.0	21.0	31.0	26.0	54.0	63.0	34.0	5.0
DN25	38.0	44.0	1"	60.0	28.0	38.0	32.0	63.0	75.0	42.0	10.0
DN32	48.0	50.0	1 ¼"	70.0	26.0	48.0	37.0	75.0	90.0	52.0	8.0
DN40	55.0	57.0	1 ½"	76.0	30.0	55.0	38.0	84.0	100.0	57.0	11.0
DN50	72.0	69.0	2"	94.0	32.0	72.0	46.0	103.0	125.0	74.0	12.0
DN65	89.0	84.0	2 ½"	116.0	34.0	89.0	55.0	121.0	149.0	88.0	6.0
DN80	106.0	95.0	3"	132.0	38.0	106.0	60.0	141.0	174.0	98.0	4.0
DN100	134.0	130.0	4"	168.0	52.0	134.0	100.0	179.0	229.0	131.0	15.0

Material specification

Nr	Component	1059PT - ½" to 2"
1	Body	Brass - CW617N
2	Head	Brass - CW617N
3	Mesh	Stainless steel
4	Gasket	PTFE
Nr	**Component**	**1059PT - 2 ½" to 4"**
1	Body	Brass
2	Head	Brass
3	Mesh	Stainless steel
4	Gasket	PTFE

Stainless steel mesh

½" to 2"	0.75mm hole
2 ½" to 4"	0.80mm hole

Maximum pressure conditions

Size	Max Pressure (bar)	Min/Max Temperature (°C)	Test Pressure Shell (bar)	Test Pressure Seat (bar)	Max Pressure (psi)	Min/Max Temperature (°F)	Test Pressure Shell (psi)	Test Pressure Seat (psi)
½" to 2"	20.0	- 10°C + 110°C	30.0	22.0	290.1	14°F + 230°F	435.1	319.1
2 ½" to 4"	16.0	- 10°C + 110°C	24.0	17.5	232.1	14°F + 230°F	348.0	253.8

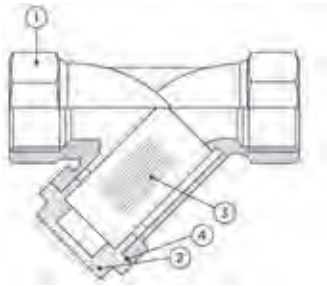

Pressure equipment directive category

All sizes classified SEP

Pressure & temperature ratings

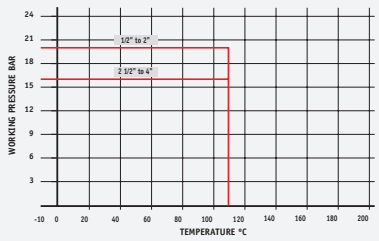

V913 Y pattern strainer

specification

- all sizes rated PN16
- 0.92 aperture mesh
- bronze body
- ISO7-1 Rc taper thread formally BS21/ BSEN 10226
- ISO 228G parallel thread formally BS2779

DN	Connection	ISO7-1Rc (taper) Code	ISO 228G (PT) Code	Weight (kg)
DN15	½"	15348	119061	0.23
DN20	¾"	15349	119062	0.32
DN25	1"	15350	119063	0.45
DN32	1 ¼"	15351	119064	0.74
DN40	1 ½"	15352	119065	0.92
DN50	2"	15353	119066	1.06

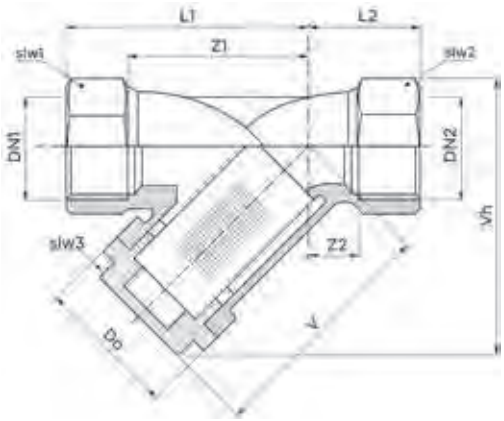

Dimensions (mm)

	Do1	Do2/Do3	DN1/DN2	L1	L2	slw1/slw2	slw3	V	Vh	Z1	Z2
DN15	29.0	29.0	DN15	23.0	40.0	29.0	19.0	95.0	59.0	10.0	27.0
DN20	35.0	35.0	DN20	25.0	42.0	35.0	24.0	95.0	70.0	12.0	29.0
DN25	41.0	41.0	DN25	29.0	51.0	41.0	28.0	95.0	84.0	13.0	35.0
DN32	50.0	50.0	DN32	37.0	77.0	50.0	34.0	95.0	99.0	14.0	54.0
DN40	60.0	60.0	DN40	40.0	80.0	60.0	41.0	95.0	116.0	16.0	56.0
DN50	73.0	73.0	DN50	46.0	92.0	73.0	49.0	95.0	123.0	19.0	64.0

Material specification

Nr	Component	Material
1	Body	Bronze (GM)
2	Cap	Bronze (GM)
3	Mesh	Stainless steel
4	Gasket	Asbestos free (non-stick)

Stainless steel mesh

DN15 - DN50	0.92mm hole

Maximum pressure conditions

Size	Max Pressure (bar)	Min/Max Temperature (°C)	Test Pressure Shell (bar)	Test Pressure Seat (bar)	Max Pressure (psi)	Min/Max Temperature (°F)	Test Pressure Shell (psi)	Test Pressure Seat (psi)
DN15 to DN50	16.0	- 10°C + 186°C	37.5	27.5	362.6	14°F + 366.8°F	543.9	398.9

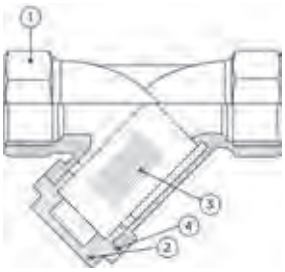

Pressure equipment directive category

All sizes classified SEP

Pressure & temperature ratings

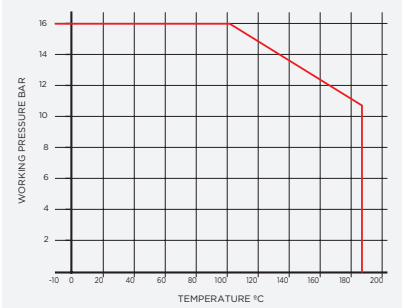

V912 Y pattern strainer (2 x flange)

water heating

specification

- all sizes rated PN16
- 1.5 to 3mm aperture mesh
- raised flanged to EN 1092-2
- ductile iron body

DN	Connection	Code	Weight (kg)	Cv	Kv
DN65	2 ½"	15361	14.50	108.81	93.0
DN80	3"	15362	17.50	159.12	136.0
DN100	4"	15363	31.25	267.93	229.0
DN125	5"	15364	43.00	424.71	363.0
DN150	6"	15365	62.50	583.83	499.0
DN200	8"	15366	107.00	955.89	817.0
DN250	10"	15367	196.67	1592.37	1361.0
DN300	12"	15368	253.00	2255.76	1928.0

*Cv - flow rate in US GPM at a pressure drop of 1 psi.
*Kv - flow rate in m3 per hour at a pressure drop of 1 bar.

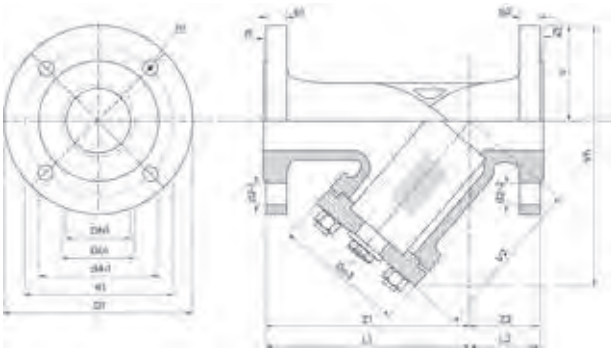

Dimensions (mm)

	b1/b2	d2-1/d2-2	Do2	Do3	f1/f2	L1	L2	V	V2	Vh	Z1	Z2
DN65	20.0	19.0	76.0	80.0	3.0	72.0	201.0	93.0	195.0	270.0	72.0	201.0
DN80	20.0	19.0	88.0	92.0	3.0	83.0	212.0	100.0	220.0	302.0	83.0	212.0
DN100	22.0	20.0	114.0	108.0	3.0	99.0	252.0	110.0	257.0	346.0	99.0	252.0
DN125	22.0	20.0	139.0	128.0	3.0	118.0	298.0	125.0	318.0	414.0	118.0	298.0
DN150	24.0	20.0	168.0	148.0	3.0	138.0	331.0	143.0	332.0	451.0	138.0	331.0
DN200	26.0	21.0	219.0	187.0	3.0	177.0	366.0	170.0	440.0	575.0	177.0	366.0
DN250	29.0	21.0	273.0	227.0	3.0	216.0	448.0	203.0	513.0	679.0	216.0	448.0
DN300	32.0	25.0	323.0	267.0	3.0	256.0	514.0	230.0	863.0	974.0	256.0	514.0

	D1	DN1	Do1	d4-1	k1	n1
DN65	185.0	DN65	76.0	118.0	95.0	4.0
DN80	200.0	DN80	88.0	132.0	106.0	4.0
DN100	220.0	DN100	114.0	156.0	122.0	4.0
DN125	250.0	DN125	139.0	184.0	138.0	4.0
DN150	285.0	DN150	168.0	211.0	188.0	4.0
DN200	340.0	DN200	219.0	268.0	206.0	4.0
DN250	405.0	DN250	273.0	319.0	281.0	4.0
DN300	460.0	DN300	323.0	370.0	330.0	4.0

Material specification

Nr	Component	Material
1	Body	Ductile iron
2	Cap	Ductile iron
3	Cover	Ductile iron
4	Strainer	Stainless steel
5	Seal	Fibre TesnitBA-U
6	Screen	Stainless steel
7	Gasket	Graphite
8	Plug	Brass

Maximum pressure conditions

Size	Max Pressure (bar)	Min/Max Temperature (°C)	Test Pressure Shell (bar)	Test Pressure Seat (bar)	Max Pressure (psi)	Min/Max Temperature (°F)	Test Pressure Shell (psi)	Test Pressure Seat (psi)
DN65 to DN300	16.0	- 10°C + 120°C	24.0	17.5	232.1	14°F + 248°F	348.1	253.8

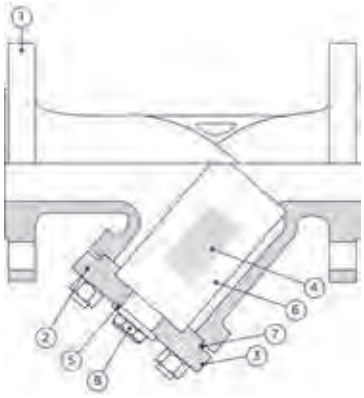

Pressure equipment directive category

All sizes classified SEP

Stainless steel mesh

DN65 - DN80	1.5mm hole
DN100 - DN300	3mm hole

Pressure & temperature ratings

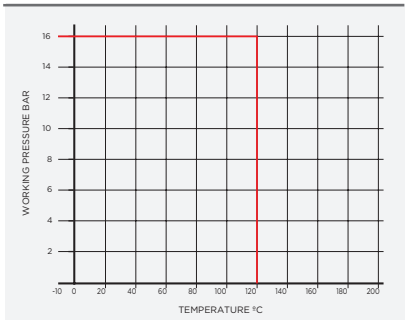

Pegler valve

pressure reducing valves

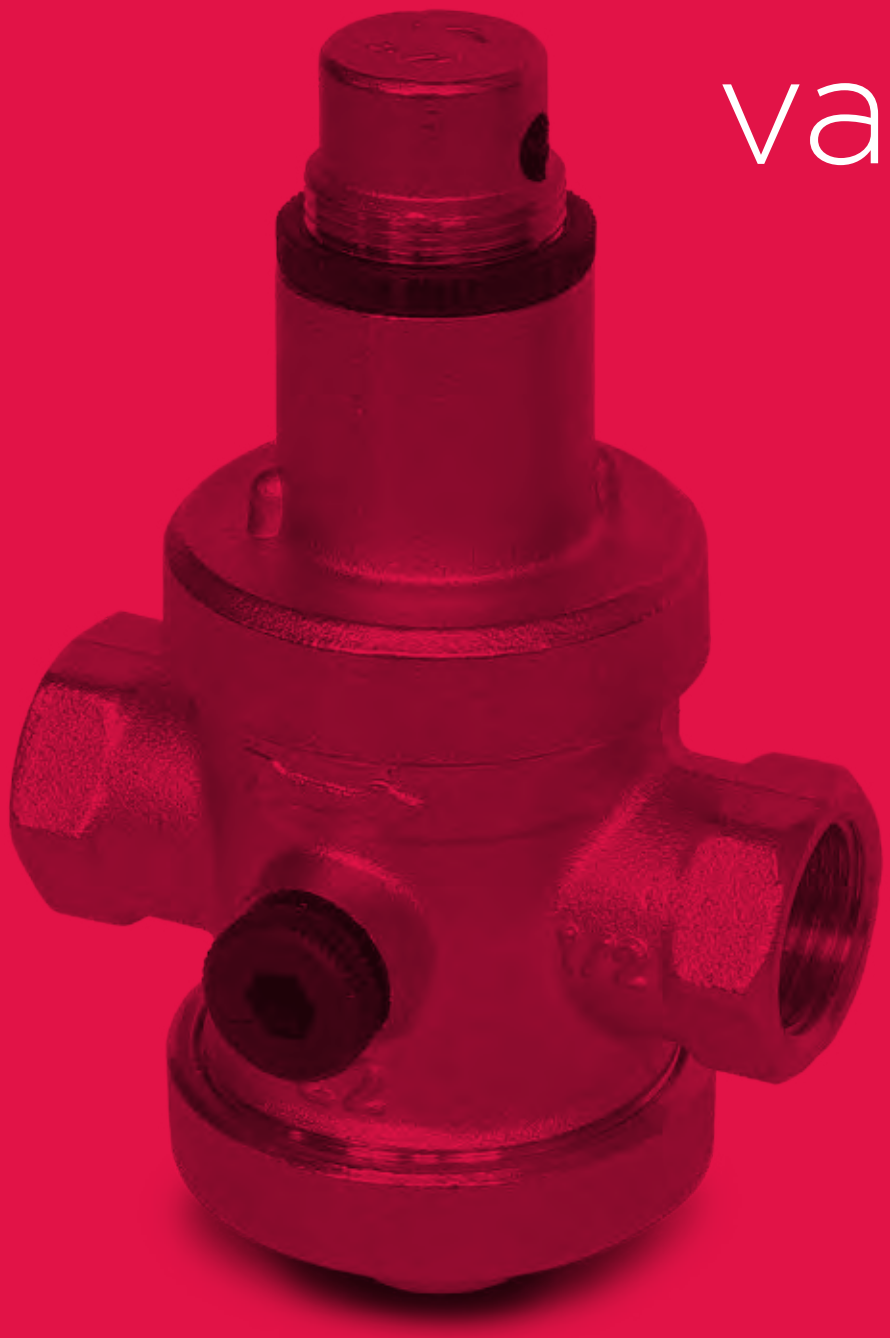

PRV4PT Pressure reducing valve

specification

- maximum inlet pressure 25 bar
- adjustable outlet 0.5 bar to 6 bar
- nickel plated brass finish
- brass body
- two outlet gauge points
- maximum inlet temp 80°C

DN	Connection	ISO 288 (PT)	Total (kg)
DN15	½"	5A2031	0.71
DN20	¾"	5A2032	1.12
DN25	1"	5A2033	1.33
DN32	1 ¼"	5A2034	2.29
DN40	1 ½"	5A2035	2.42
DN50	2"	5A2036	3.62
DN65	2 ½"	5A2037	4.00
DN80	3"	5A2038	5.53
DN100	4"	5A2039	6.80

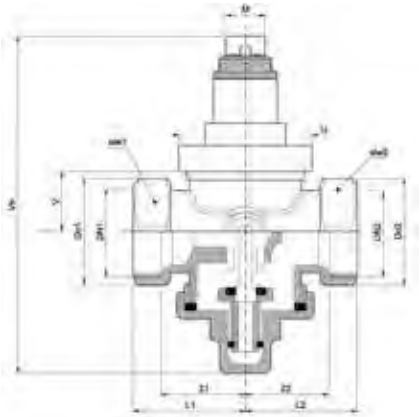

Dimensions (mm)

	Do1/Do2	DN1/DN2	L1/L2	M	slw1/slw2	U	V	Vh	Z1/Z2
DN15	32.0	½"	39.0	23.0	28.0	50.0	33.0	118.0	28.0
DN20	38.0	¾"	46.0	27.0	33.0	59.0	38.0	141.0	33.0
DN25	45.0	1"	46.0	27.0	39.0	59.0	43.0	152.0	33.0
DN32	54.0	1 ¼"	58.0	35.0	47.0	75.0	50.0	217.0	41.0
DN40	65.0	1 ½"	63.0	37.0	56.0	81.0	58.0	218.0	45.0
DN50	78.0	2"	71.0	42.0	68.0	91.0	68.0	244.0	51.0
DN65	98.0	2 ½"	74.0	44.0	85.0	95.0	82.0	264.0	53.0
DN80	118.0	3"	74.0	44.0	102.0	96.0	97.0	287.0	53.0
DN100	144.0	4"	94.0	56.0	125.0	121.0	117.0	325.0	67.0

Material specification

Nr	Component	Material
1	Body	Brass - CW617N, EN12165
2	Internal parts	Brass - CW617N, EN12164
3	Seat	Stainless steel
4	Bar	Brass - CW617N, EN12164
5	'O' ring	NBR 70 SH
6	Plastic parts	Ultramild® A3K (BASF)
7	Flat gaskets	Fasit

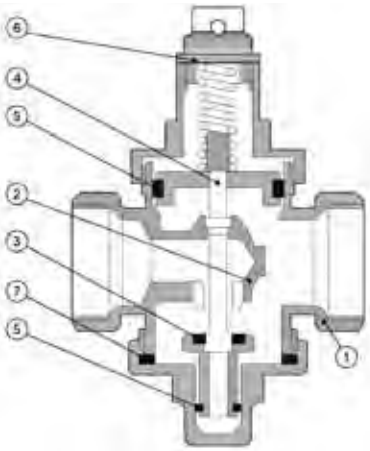

Pressure & temperature ratings

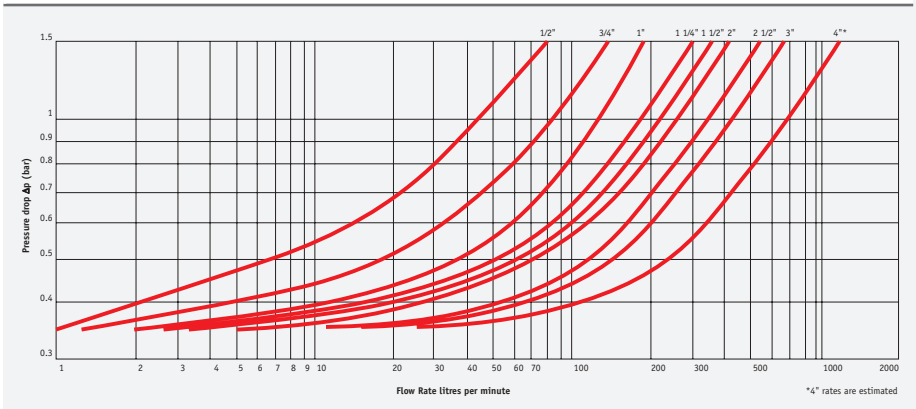

WRAS approval temperature 100°C maximum

Pressure gauge, 0 - 10bar

Sizes	
Code	5A2003

Operating pressure (bar)

Size	Working pressure (bar) Temp up to 120°C
PG Pressure guage	0 - 10

PEG62 Water hammer arrestor

specification

- absorbs water shock caused by rapid valve closure
- nickel plated
- used in sequence for large pipe diameters
- brass body
- 10m maximum pipe length for a single valve

Parallel (PT) tread	ISO 288.1 (PT)	Total (kg)
½"	5A2080	0.48

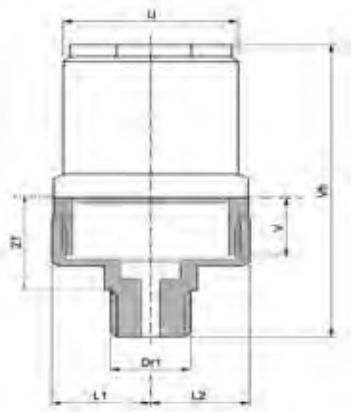

Dimensions (mm)

	Dr1	L1/L2	U	V	Vh	Z1
½"	½"	26.0	48.0	58.0	90.0	33.0

Material specification

Nr	Component	Material
1	Body	Brass (NP)
2	Backnut	Brass (NP)
3	Diaphragm	Acetal resin
4	Seals	NBR
5	Gasket	Non-asbestos fibre

Maximum pressure conditions

Size	Max Pressure (bar)	Min/Max Temperature (°C)	Max Pressure (psi)	Min/Max Temperature (°F)
½"	40.0	4° + 130°C	580.0	39° + 266°F

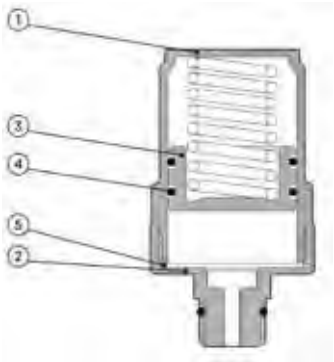

Pegler valve

commissioning valves

1600 Pressure Independent Control Valve (PICV)

water heating cooling

specification

- operating temperature -10°C to 90°C
- all sizes rated PN25
- DN15 to DN25 sizes
- DZR brass body

DN	Connection	Code	Total (kg)	Kv
½" DN15 (LF)	½"	16001	0.9	0.01-0.033
½" DN15 (SF)	½"	16002	0.9	0.025-0.125
½" DN15 (HF)	½"	16003	0.9	0.083-0.39
¾" DN20 (SF)	¾"	16004	1.5	0.089-0.25
¾" DN20 (HF)	¾"	16005	1.5	0.232-0.617
1" DN25 (SF)	1"	16006	1.8	0.232-0.617

*Kv - flow rate in m3 per hour at a pressure drop of 1 bar.

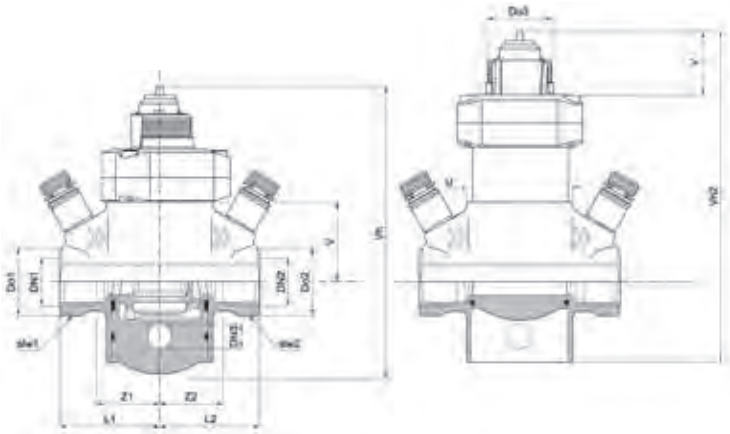

Dimensions (mm)

	Do1/Do2	Do3	DN1/DN2	DN3	L1/L2	M	slw1/slw2	U	V	Vh	Vh2	Y	Z1/Z2
½" DN15 (LF)	31.0	30.0	22.0	11.0	48.0	65.0	27.0	49.0	38.0	134.0	153.0	29.0	29.0
½" DN15 (SF)	31.0	30.0	22.0	11.0	48.0	65.0	27.0	49.0	38.0	134.0	153.0	29.0	29.0
½" DN15 (HF)	31.0	30.0	22.0	11.0	48.0	65.0	27.0	49.0	38.0	134.0	153.0	29.0	29.0
¾" DN20 (SF)	32.0	30.0	27.0	15.0	52.0	76.0	32.0	60.0	50.0	163.0	188.0	32.0	33.0
¾" DN20 (HF)	32.0	30.0	27.0	15.0	52.0	76.0	32.0	60.0	50.0	163.0	188.0	32.0	33.0
1" DN25 (SF)	47.0	30.0	36.0	15.0	58.0	76.0	40.0	60.0	50.0	163.0	188.0	32.0	42.0

Material specification

Nr	Component	Material
1	Body	DZR brass
2	Clamp	DZR brass
3	Cap	DZR brass
4	Socket screw	Steel
5	Test point	Brass
6	"O" ring	EPDM
7	Cartridge	PPS
8	Locking peg	POM

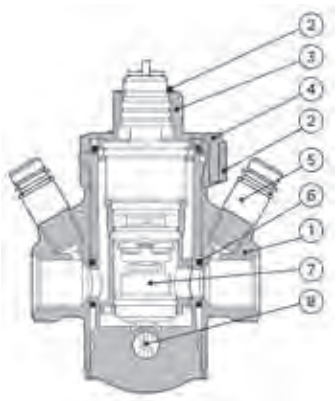

Test pressure (bar)

Sizess	Shell (bar)	Seat (bar)
½" to 1"	40.0	27.5

Pressure equipment directive category

All sizes classified SEP

1260 Commissioning valve

specification

- all sizes PN20
- regulation, isolation and flow measurement functions
- Y pattern body
- handle position indicator
- DZR brass body
- meets BS7350
- includes memory stop
- includes test points
- ISO 228G parallel thread

DN	Connection	ISO 288 (PT) parallel	Total (kg)	Cv	Kv
DN15	½" ULF	126039	0.57	0.228	0.195
DN15	½" LF	126022	0.58	0.468	0.400
DN15	½" MF	126043	0.58	1.168	0.998
DN15	½"	126023	0.57	2.176	1.860
DN20	¾"	126024	0.64	2.656	2.270
DN25	1"	126025	0.90	7.149	6.110
DN32	1 ¼"	126026	1.31	14.801	12.650
DN40	1 ½"	126027	1.61	22.230	19.000
DN50	2"	126028	2.66	33.251	28.420

*Cv - flow rate in US GPM at a pressure drop of 1 psi.
*Kv - flow rate in m3 per hour at a pressure drop of 1 bar.

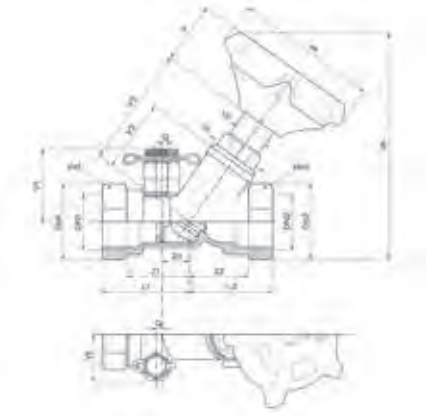

Dimensions (mm)

	Do1/Do2	DN1/DN2	L1/L2	M	M1	Q	slw1/slw2	U1	U2	V1	V2	V3	Vh	Vt	Y	Z1/Z2	Zo
DN15	27.0	½" ULF	40.0	89.0	9.0	5.0	27.0	26.0	20.0	48.0	30.0	58.0	118.0	20.0	38.0	30.0	20.0
DN15	27.0	½" LF	40.0	89.0	9.0	5.0	27.0	26.0	20.0	48.0	30.0	58.0	118.0	20.0	38.0	30.0	20.0
DN15	27.0	½" MF	40.0	89.0	10.0	5.0	27.0	26.0	20.0	48.0	30.0	58.0	118.0	20.0	38.0	30.0	20.0
DN15	27.0	½"	40.0	89.0	10.0	5.0	27.0	26.0	20.0	48.0	30.0	58.0	118.0	20.0	38.0	30.0	20.0
DN20	32.0	¾"	43.0	89.0	10.0	5.0	32.0	26.0	20.0	51.0	35.0	64.0	125.0	20.0	38.0	33.0	23.0
DN25	39.0	1"	44.0	89.0	11.0	5.0	39.0	30.0	21.0	55.0	35.0	63.0	128.0	20.0	38.0	34.0	24.0
DN32	50.0	1 ¼"	61.0	89.0	11.0	5.0	50.0	42.0	21.0	59.0	53.0	82.0	148.0	20.0	38.0	47.0	41.0
DN40	55.0	1 ½"	64.0	89.0	12.0	5.0	55.0	50.0	25.0	62.0	53.0	85.0	153.0	20.0	38.0	50.0	44.0
DN50	70.0	2"	79.0	89.0	13.0	5.0	70.0	57.0	21.0	69.0	64.0	103.0	175.0	20.0	38.0	66.0	59.0

Material specification

Nr	Component	Material
1	Body	DZR Brass
2	Bonnet	DZR Brass
3	Spindle	DZR Brass
4	Disc	DZR Brass
5	Gland	DZR Brass
6	"O" rings	EPTO
7	Orifice plate	DZR Brass
8	Adjustment screw	DZR Brass
9	Test points	DZR Brass
10	Seals	EPTO
11	Handle	30% glass filled Nylon 66
12	Set screw	Brass

Maximum pressure conditions

Size	Max Pressure (bar)	Min/Max Temperature (°C)	Test Pressure Shell (bar)	Test Pressure Seat (bar)	Max Pressure (psi)	Min/Max Temperature (°F)	Test Pressure Shell (psi)	Test Pressure Seat (psi)
¼" to 2"	20.0	- 10°C + 120°C	30.0	22.0	290.1	14°F + 248°F	435.1	319.1

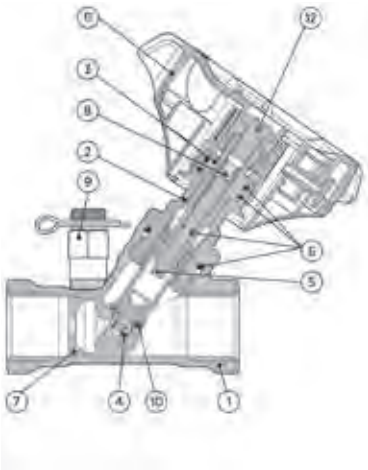

Pressure equipment directive category

All sizes classified SEP

1200 Regulating valve

water heating cooling

specification

- all sizes PN20
- four pattern body
- handle position indicator
- meets BS7350
- includes memory stop
- DZR brass body
- ISO 228 parallel thread, with regulation and isolation functions

DN	Connection	ISO 288 (PT) parallel	Total (kg)	Cv	Kv
DN15	½"	126002	0.23	2.69	2.30
DN20	¾"	126003	0.55	3.29	2.84
DN25	1"	126004	0.86	8.37	7.15
DN32	1 ¼"	126005	1.24	17.64	15.08
DN40	1 ½"	126006	1.62	24.38	20.84
DN50	2"	126007	2.90	33.80	28.89

*Cv - flow rate in US GPM at a pressure drop of 1 psi.
*Kv - flow rate in m3 per hour at a pressure drop of 1 bar.

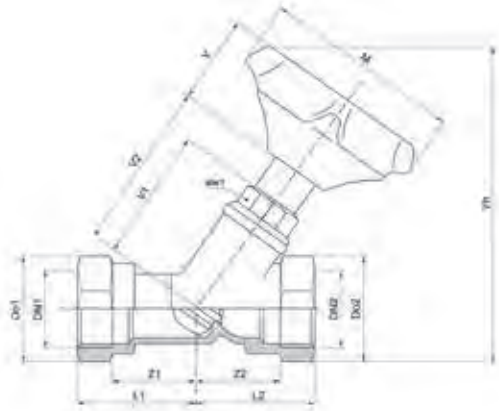

Dimensions (mm)

	Do1/Do2	DN1/DN2	L1/L2	M	slw1/slw2	U1	U2	V1	V2	Vh	Vt	Y	Z1/Z2
DN15	27.0	½"	43.0	89.0	23.0	27.0	20.0	30.0	58.0	116.0	24.0	38.0	33.0
DN20	37.0	¾"	44.0	89.0	32.0	26.0	20.0	35.0	64.0	125.0	25.0	38.0	33.0
DN25	46.0	1"	48.0	89.0	39.0	30.0	21.0	35.0	64.0	128.0	26.0	38.0	33.0
DN32	50.0	1 ¼"	61.0	89.0	50.0	42.0	21.0	37.0	66.0	135.0	30.0	38.0	47.0
DN40	55.0	1 ½"	64.0	89.0	55.0	50.0	25.0	54.0	86.0	154.0	34.0	38.0	50.0
DN50	70.0	2"	79.0	89.0	70.0	57.0	21.0	64.0	103.0	175.0	37.0	38.0	66.0

Material specification

Nr	Component	Material
1	Body	DZR Brass
2	Bonnet	DZR Brass
3	Spindle	DZR Brass
4	Disc	DZR Brass
5	Gland	DZR Brass
6	"O" rings	EPTO
7	Adjustment screw	DZR Brass
8	Seals	EPTO
9	Handle	30% glass filled Nylon 66
10	Set screw	Brass

Maximum pressure conditions

Size	Max Pressure (bar)	Min/Max Temperature (°C)	Test Pressure Shell (bar)	Test Pressure Seat (bar)	Max Pressure (psi)	Min/Max Temperature (°F)	Test Pressure Shell (psi)	Test Pressure Seat (psi)
¼" to 2"	20.0	- 10°C + 120°C	30.0	22.0	290.1	14°F + 248°F	435.1	319.1

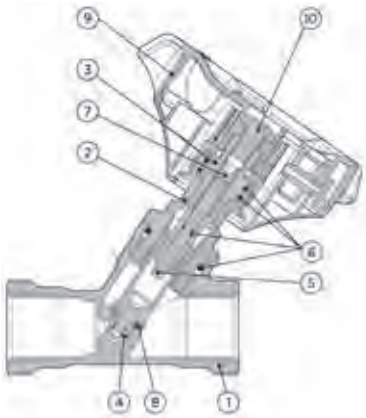

Pressure equipment directive category

All sizes classified SEP

1250 Commissioning station

specification

- all sizes PN20
- flow measurement function
- includes test point
- female ends
- DZR brass body

DN	Connection	ISO 288 (PT) parallel	Total (kg)	Kvs
DN15	½" ULF	126040	0.22	0.18
DN15	½" LF	126090	0.22	0.41
DN15	½" MF	126049	0.22	1.00
DN15	½"	126091	0.22	2.15
DN20	¾"	126092	0.25	4.78
DN25	1"	126093	0.39	8.11
DN32	1 ¼"	126094	0.54	15.41
DN40	1 ½"	126095	0.59	22.23
DN50	2"	126096	0.92	48.21

*Kv - flow rate in m3 per hour at a pressure drop of 1 bar.

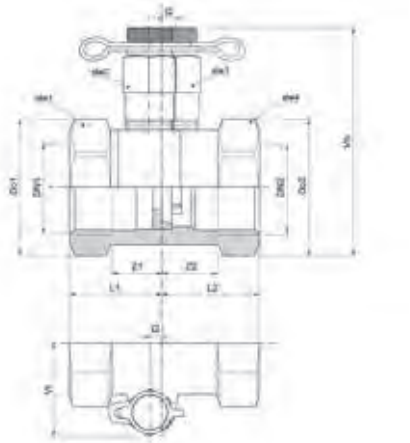

Dimensions (mm)

	Do1/Do2	DN1/DN2	L1/L2	Q	slw1/slw4	slw2/slw3	Vh	Vt	Z1/Z2
DN15	32.0	½" ULF	24.0	3.0	28.0	16.0	65.0	25.0	12.0
DN15	32.0	½" LF	24.0	3.0	28.0	16.0	65.0	25.0	12.0
DN15	32.0	½" MF	24.0	3.0	28.0	16.0	65.0	25.0	12.0
DN15	32.0	½"	24.0	3.0	28.0	16.0	65.0	25.0	12.0
DN20	42.0	¾"	26.0	3.0	37.0	16.0	73.0	27.0	12.0
DN25	53.0	1"	32.0	3.0	46.0	16.0	82.0	27.0	12.0
DN32	66.0	1 ¼"	34.0	4.0	57.0	16.0	91.0	31.0	12.0
DN40	73.0	1 ½"	36.0	4.0	63.0	16.0	95.0	34.0	13.0
DN50	92.0	2"	38.0	80.0	80.0	16.0	110.0	40.0	13.0

Material specification

Nr	Component	Material
1	Body	DZR Brass
2	Test point	DZR Brass
3	Seals	EPTO

Maximum pressure conditions

Size	Max Pressure (bar)	Min/Max Temperature (°C)	Test Pressure Shell (bar)	Test Pressure Seat (bar)	Max Pressure (psi)	Min/Max Temperature (°F)	Test Pressure Shell (psi)	Test Pressure Seat (psi)
½" to 2"	20.0	- 10°C + 120°C	30.0	22.0	290.1	14°F + 248°F	435.1	319.1

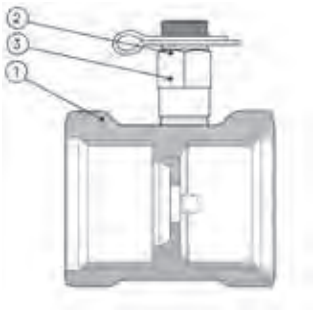

Pressure equipment directive category

All sizes classified SEP

V952 Double regulating valve

specification

- all sizes PN16
- ductile iron double regulating valve with regulating and isolating functions (DRV and VODRV)
- ductile iron body
- flanged to EN1092-2

DN	Connection	Code	Total (kg)
DN65	2 ½"	15531	18.0
DN80	3"	15532	24.0
DN100	4"	15533	30.0
DN125	5"	15534	45.0
DN150	6"	15535	52.0
DN200	8"	15536	105.0
DN250	10"	15537	185.0
DN300	12"	15538	248.0

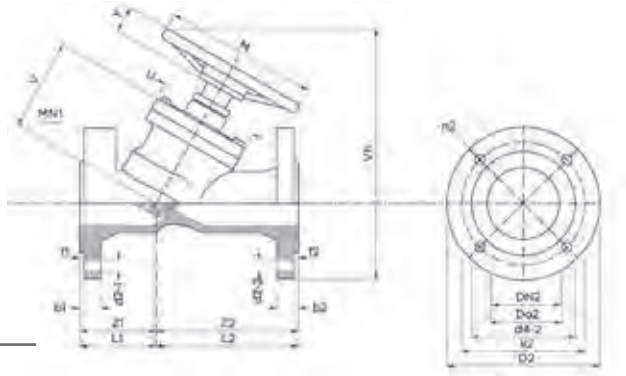

Flow rates kv values m³/h

Range*	DN65	DN80	DN100	DN125	DN150	DN200	DN250	DN300
1	18.6	13.3	23.6	32.2	48.0	41.0	97.0	63.0
2	26.8	20.0	36.6	55.6	75.0	61.0	146.0	113.0
3	35.4	24.1	48.5	68.8	110.0	81.0	177.0	174.0
4	38.7	34.9	55.2	98.0	162.0	99.0	232.0	245.0
5	49.4	45.9	75.2	145.7	233.0	161.0	368.0	397.0
6	65.5	71.6	97.9	199.1	294.0	215.0	543.0	628.0
7	74.6	98.8	123.9	231.7	346.0	271.0	695.0	792.0
8	80.2	113.7	149.4	260.5	371.0	339.0	832.0	873.0
9						412.0	960.0	1002.0
10						482.0	1045.0	1112.0
11						546.0	1151.0	1223.0
12							1248.0	1331.0
13							1292.0	1383.0
14								1444.0
15								1505.0
16								1639.0
17								1707.0
18								1730.0
Fully open	83.8	119.5	178.7	272.7	380.0	608.0	1360.0	1791.0

*Number of rotations for closed to fully open

Material specification

Nr	Component	Material
1	Body	Ductile iron
2	Bonnet	Ductile iron
3	Disc, EPDM coated	Ductile iron
4	Disc nail	Brass
5	"O" ring	EPDM
6	Stem	Stainless steel
7	Gasket	Graphite
8	Handwheel	Carbon steel (DN50 - DN100) Ductile iron (DN125 - DN300)

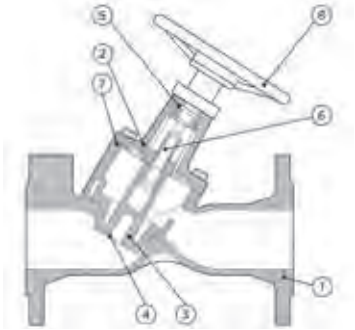

Dimensions (mm)

	b1/b2	d4-1/d4-2	D1/D2	DN1/DN2	f1/f2	K1/K2	L1/L2	M	n1/n2	U	V	Vh	Y	Z1/Z2
DN65	20.0	118.0	185.0	DN65	3.0	145.0	145.0	154.0	4.0	124.0	153.0	386.0	15.0	145.0
DN80	22.0	132.0	200.0	DN80	3.0	160.0	155.0	173.0	8.0	143.0	174.0	405.0	15.0	155.0
DN100	24.0	156.0	220.0	DN100	3.0	180.0	175.0	198.0	8.0	168.0	203.0	433.0	15.0	175.0
DN125	26.0	184.0	250.0	DN125	3.0	210.0	200.0	229.0	8.0	199.0	238.0	478.0	15.0	200.0
DN150	26.0	211.0	285.0	DN150	3.0	240.0	240.0	261.0	8.0	231.0	274.0	531.0	15.0	240.0
DN200	30.0	266.0	340.0	DN200	3.0	295.0	300.0	324.0	12.0	294.0	345.0	623.0	15.0	300.0
DN250	30.0	319.0	405.0	DN250	3.0	355.0	365.0	388.0	12.0	358.0	417.0	773.0	15.0	365.0
DN300	30.0	370.0	460.0	DN300	3.0	410.0	425.0	451.0	12.0	421.0	488.0	920.0	15.0	425.0

Maximum pressure conditions

Size	Max Pressure (bar)	Min/Max Temperature (°C)	Test Pressure Shell (bar)	Test Pressure Seat (bar)	Max Pressure (psi)	Min/Max Temperature (°F)	Test Pressure Shell (psi)	Test Pressure Seat (psi)
DN65 to DN300	16.0	- 10°C + 120°C	24.0	17.5	232.1	14°F + 248°F	348.0	353.5

Pressure equipment directive category

All sizes classified SEP

V953 Metering station

water heating cooling

specification

- all sizes PN16
- 304 stainless steel
- complete with test points and extensions
- flow measurement function
- stainless steel body
- meets BS7350
- used with V952 commissioning valve

DN	Connection for fitting between BS end 1092-2 flanges	Code	Total (kg)	Cv	Kv
DN50	2″	15540	1.4	55.58	47.5
DN65	2 ½″	15541	1.9	117.82	100.7
DN80	3″	15542	2.2	156.55	133.8
DN100	4″	15543	2.4	278.11	237.7
DN125	5″	15544	3.4	396.63	339.0
DN150	6″	15545	3.4	597.87	511.0
DN200	8″	15546	4.7	1003.86	858.0
DN250	10″	15547	6.1	1444.95	1235.0
DN300	12″	15548	7.6	2097.81	1793.0

*Cv - flow rate in US GPM at a pressure drop of 1 psi.
*Kv - flow rate in m3 per hour at a pressure drop of 1 bar.

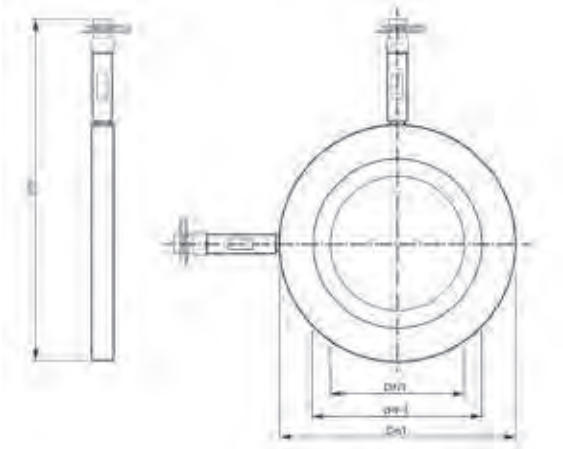

Dimensions (mm)

	DN1	Do1	d4-1	Vh
DN50	2″	109.0	65.0	164.0
DN65	2 ½″	127.0	65.0	182.0
DN80	3″	142.0	65.0	195.0
DN100	4″	162.0	65.0	212.0
DN125	5″	192.0	73.0	237.0
DN150	6″	218.0	82.0	260.0
DN200	8″	273.0	91.0	307.0
DN250	10″	329.0	95.0	353.0
DN300	12″	384.0	110.0	401.0

Material specification

Nr	Component	Material
1	Body	Stainless steel
2	Test point	DZR Brass
3	Extension	Stainless steel

Maximum pressure conditions

Size	Max Pressure (bar)	Min/Max Temperature (°C)	Test Pressure Shell (bar)	Test Pressure Seat (bar)	Max Pressure (psi)	Min/Max Temperature (°F)	Test Pressure Shell (psi)	Test Pressure Seat (psi)
DN50 to DN300	16.0	- 10°C + 120°C	24.0	17.5	232.0	14°F + 248°F	348.1	253.8

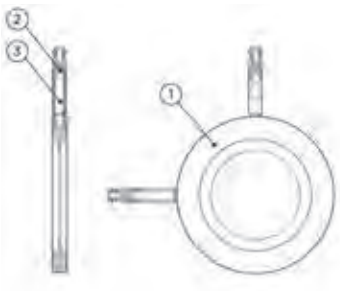

Pressure equipment directive category

All sizes classified SEP

710TP Test points

water heating cooling

specification

- DZR brass body
- self sealing
- ISO 7-1 R thread

Connection	Code	Total (kg)
¼" x 36mm	126041	0.03
¼" x 75mm	126042	0.06

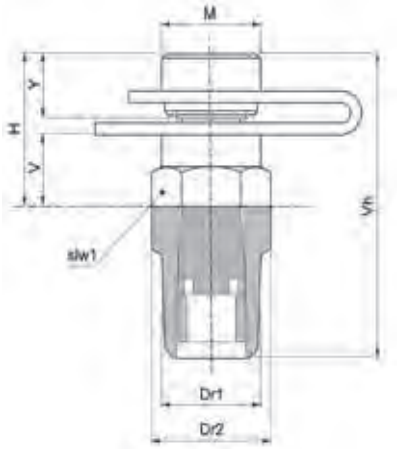

Dimensions (mm)

	Dr1	Dr2	H	M	slw1	V	Vh	Y
¼" x 36mm	¼"	18.0	19.0	13.0	14.0	26.0	36.0	8.0
¼" x 75mm	¼"	18.0	19.0	13.0	14.0	26.0	75.0	8.0

Material specification

Nr	Component	Material
1	Body	DZR brass

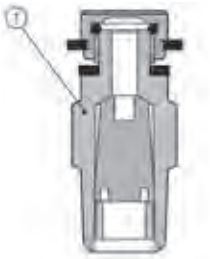

Pegler valve

globe valves

1029 Globe valve

steam water oil compressed air

specification

- all sizes rated PN32
- renewable PTFE seat disc
- female ends
- BS 5154 series B
- rising stem
- gland packed
- bronze (gunmetal)

body
- taper threaded BS EN 10226 (1507 - 1)
- ANSI American taper thread
- ISO 228

DN	Connection	ISO7-1 Rc (taper)	ISO-Rp (TP)	ANSI NPT (taper)	Total (kg)	Cv	Kv
DN15	¼"	110005			0.20		0.70
DN20	⅜"	110006			0.22		1.10
DN25	½"	110007	110047	110027	0.38	2.30	2.00
DN32	¾"	110008	110048	110028	0.54	5.90	5.00
DN40	1"	110009	110049	110029	0.84	11.70	10.00
DN50	1 ¼"	110010	110050	110030	1.36	18.70	16.00
DN65	1 ½"	110011	110051	110031	1.76	26.90	23.00
DN80	2"	110012	110052	110032	2.62	49.10	42.00

*Cv - flow rate in US GPM at a pressure drop of 1 psi.
*Kv - flow rate in m3 per hour at a pressure drop of 1 bar.

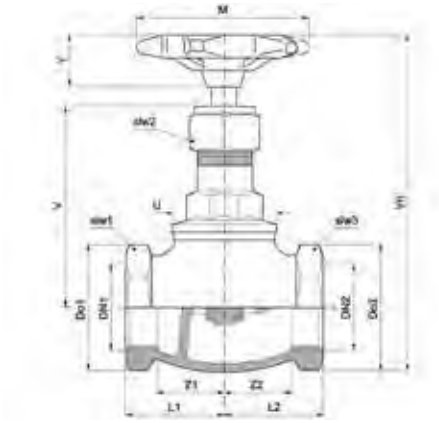

Dimensions (mm)

	Do1/Do2	DN1/DN2	L1/L2	M	slw1/slw3	slw2	U	V	Vh	Y	Z1/Z2
DN15	29.0	¼"	24.0	70.0	29.0	19.0	25.0	38.0	91.0	17.0	17.0
DN20	29.0	⅜"	23.0	70.0	29.0	19.0	25.0	38.0	91.0	17.0	15.0
DN25	29.0	½"	29.0	70.0	29.0	19.0	31.0	57.0	110.0	17.0	19.0
DN32	36.0	¾"	33.0	70.0	36.0	19.0	33.0	62.0	118.0	17.0	22.0
DN40	42.0	1"	39.0	85.0	42.0	24.0	40.0	75.0	135.0	20.0	27.0
DN50	51.0	1 ¼"	45.0	85.0	51.0	28.0	49.0	98.0	164.0	23.0	30.0
DN65	57.0	1 ½"	50.0	105.0	57.0	32.0	57.0	119.0	188.0	26.0	35.0
DN80	72.0	2"	61.0	105.0	72.0	32.0	69.0	126.0	206.0	26.0	47.0

Material specification

Nr	Component	Material
1	Body	Bronze (Gunmetal)
2	Bonnet	Forged brass
3	Stem	Brass bar
4	Disc holder	Brass bar
5	Disc ring	Brass bar
6	Disc	Glass filled PTFE
7	Disc nut	Brass bar
8	Gland	Brass bar
9	Gland nut	Brass bar
10	Packing	PTFE
11	Handwheel	Aluminium
12	Handwheel nut	Brass bar
13	Rating disc	Aluminium

Maximum pressure conditions

Size	Max Pressure (bar)	Min/Max Temperature (°C)	Test Pressure Shell (bar)	Test Pressure Seat (bar)	Max Pressure (psi)	Min/Max Temperature (°F)	Test Pressure Shell (psi)	Test Pressure Seat (psi)
¼" to 2"	32.0	- 10°C + 198°C	48.0	35.2	464.1	14°F + 388.4°F	696.1	510.5

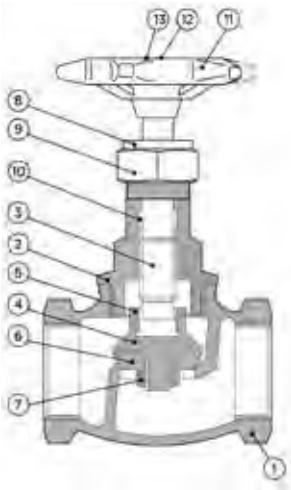

Pressure equipment directive category

Compressed air applications ¼" - 1" classified SEP. 1 ¼" - 2" classified CAT1
All other applications ¼" - 2" classified SEP

Pressure & temperature ratings

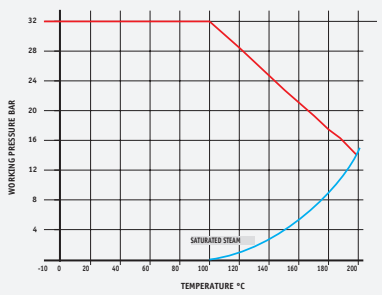

steam water oil compressed air

10215 Globe valve

specification

- BS 5154 PN20
- renewable non-metalic seat disc
- female ends
- PTFE gland packed
- bronze (gunmetal) body and bonnet
- BS21 taper thread
- ISO 228 parallel thread

DN	Connection	ISO7-1Rc (taper)	ISO 228 (PT)	Total (kg)	Cv	Kv
DN15	½"	112070	112080	0.36	7.28	6.22
DN20	¾"	112071	112081	0.44	16.67	14.25
DN25	1"	112072	112082	0.70	32.54	27.81
DN32	1 ¼"	112073	112083	1.06	63.61	54.37
DN40	1 ½"	112074	112084	1.43	90.22	77.11
DN50	2"	112075	112085	2.38	156.31	133.60

*Cv - flow rate in US GPM at a pressure drop of 1 psi.
*Kv - flow rate in m3 per hour at a pressure drop of 1 bar.

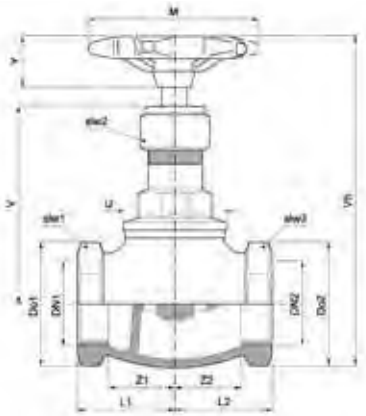

Dimensions (mm)

	Do1/Do2	DN1/DN2	L1/L2	M	slw1/slw3	slw2	U	V	Vh	Y	Z1/Z2
DN15	28.0	½"	26.0	66.0	28.0	18.0	23.0	22.0	90.0	20.0	16.0
DN20	36.0	¾"	30.0	70.0	36.0	19.0	33.0	62.0	118.0	17.0	22.0
DN25	42.0	1"	35.0	85.0	42.0	24.0	40.0	75.0	135.0	20.0	27.0
DN32	55.0	1 ¼"	41.0	91.0	52.0	25.0	45.0	37.0	143.0	25.0	30.0
DN40	61.0	1 ½"	45.0	100.0	58.0	26.0	53.0	38.0	155.0	30.0	36.0
DN50	75.0	2"	58.0	115.0	70.0	33.0	64.0	52.0	190.0	30.0	45.0

Material specification

Nr	Component	Material
1	Body	Bronze (Gunmetal)
2	Bonnet	Bronze (Gunmetal)
3	Stem	Brass bar
4	Disc holder	Brass bar
5	Disc ring	Brass bar
6	Disc	Glass filled PTFE
7	Disc nut	Brass bar
8	Gland	Brass bar
9	Gland nut	Brass bar
10	Packing	PTFE
11	Handwheel	Aluminium
12	Handwheel nut	Brass bar
13	Rating disc	Aluminium

Maximum pressure conditions

Size	Max Pressure (bar)	Min/Max Temperature (°C)	Test Pressure Shell (bar)	Test Pressure Seat (bar)	Max Pressure (psi)	Min/Max Temperature (°F)	Test Pressure Shell (psi)	Test Pressure Seat (psi)
¼" to 2"	20.0	- 10°C + 170°C	30.0	24.0	290.0	14°F + 388°F	435.2	348.1

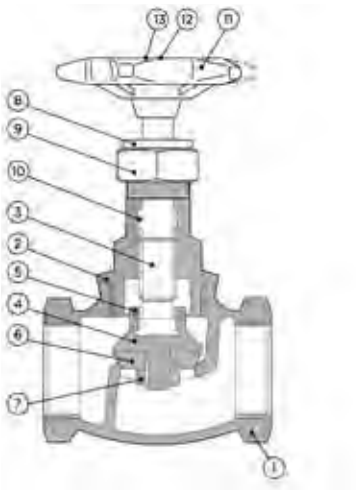

Pressure equipment directive category

Compressed air applications ¼" - 1" classified SEP. 1 ¼" - 2" CAT1
All other applications ¼" - 2" classified SEP

Pressure & temperature ratings

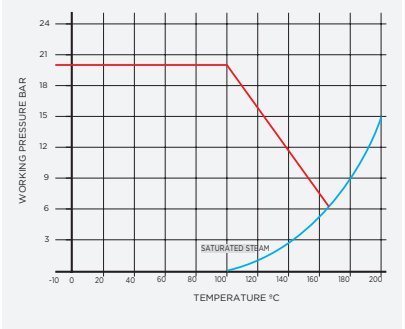

1031 Globe valve

steam water oil

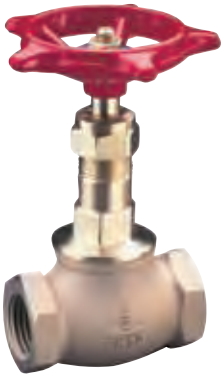

specification

- metal seat disc
- female ends
- gland packed
- BS 5154 PN32 series B
- bronze (gunmetal) body

DN	Connection	ISO7-1Rc (taper)	ISO 228 (PT)	Total (kg)	Cv	Kv
DN15	½"	112007	112047	0.39	2.30	2.00
DN20	¾"	112008	112048	0.55	5.90	5.00
DN25	1"	112009	112049	0.87	11.70	10.00
DN32	1 ¼"	112010	112050	1.45	18.70	16.00
DN40	1 ½"	112011	112051	1.83	26.90	23.00
DN50	2"	112012	112052	2.61	49.10	42.00

*Cv - flow rate in US GPM at a pressure drop of 1 psi.
*Kv - flow rate in m3 per hour at a pressure drop of 1 bar.

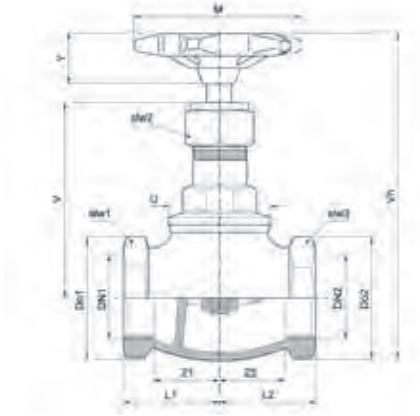

Dimensions (mm)

	Do1/Do2	DN1/DN2	L1/L2	M	slw1/slw3	slw2	U	V	Vh	Y	Z1/Z2
DN15	29.0	½"	29.0	70.0	29.0	19.0	31.0	57.0	110.0	17.0	19.0
DN20	36.0	¾"	33.0	70.0	36.0	19.0	33.0	62.0	118.0	17.0	22.0
DN25	42.0	1"	39.0	85.0	42.0	24.0	40.0	75.0	135.0	20.0	27.0
DN32	51.0	1 ¼"	45.0	85.0	51.0	28.0	49.0	98.0	164.0	23.0	30.0
DN40	57.0	1 ½"	50.0	105.0	57.0	32.0	57.0	119.0	188.0	26.0	35.0
DN50	72.0	2"	61.0	105.0	72.0	32.0	69.0	126.0	206.0	26.0	47.0

Material specification

Nr	Component	Material
1	Body	Bronze (Gunmetal)
2	Bonnet	Forged brass
3	Stem	Brass bar
4	Disc holder	Brass bar
5	Disc ring	Brass bar
6	Disc	Glass filled PTFE
7	Disc nut	Brass bar
8	Gland	Brass bar
9	Gland nut	Brass bar
10	Packing	PTFE
11	Handwheel	Aluminium
12	Handwheel nut	Brass bar
13	Rating disc	Aluminium

Maximum pressure conditions

Size	Max Pressure (bar)	Min/Max Temperature (°C)	Test Pressure Shell (bar)	Test Pressure Seat (bar)	Max Pressure (psi)	Min/Max Temperature (°F)	Test Pressure Shell (psi)	Test Pressure Seat (psi)
½" to 2"	20.0	- 10°C + 170°C	30.0	24.0	290.0	14°F + 388°F	435.2	348.1

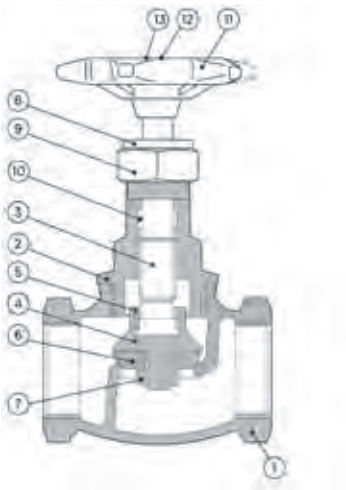

Pressure equipment directive category

All sizes classified SEP

Pressure & temperature ratings

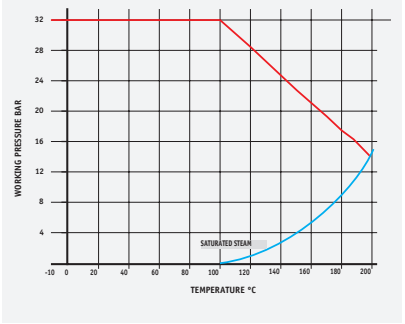

Pegler Prestex

plumbing valves

P775 Automatic air vent

water

specification

- 10 bar at 120°C
- brass body

Connection	Code	Total (kg)
½"	538009	0.24

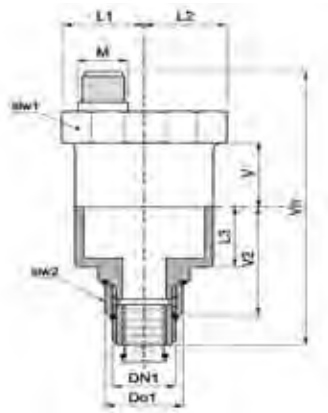

Dimensions (mm)

	DN1/DN2	Do1	L1/L2	L3	M	slw1	slw2	V	Vh	V2
½"	DN20	28.0	22.0	20.0	11.0	44.0	24.0	16.0	98.0	41.0

Material specification

Nr	Component	Material
1	Body	Brass
2	Float	Polypropylene
3	Big cap	Brass
4	"O" ring 1	NBR
5	Plastic bonnet	Polyacetalic
6	End cap	Brass
7	Rubber seal	NBR
8	Spring link	Stainless steel, SS302
9	Plastic disc	Polyacetalic
10	"O" ring 2	NBR 70 shore
11	Check valve body	Brass
12	Spring	Stainless steel. SS302
13	Plastic bore	Polypropylene
14	"O" ring 3	NBR 70 shore

Maximum pressure conditions

Size	Max Pressure (bar)	Min/Max Temperature (°C)	Test Pressure Shell (bar)	Test Pressure Seat (bar)	Max Pressure (psi)	Min/Max Temperature (°F)	Test Pressure Shell (psi)	Test Pressure Seat (psi)
½"	10.0	+ 120°C	24.0	17.5	145.0	+ 248°F	348.1	253.8

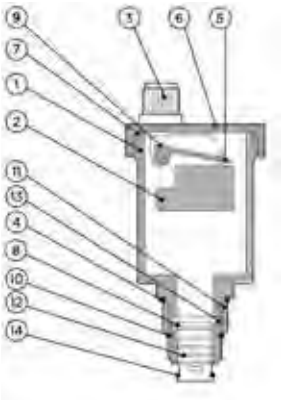

PB50HU Ball valve

water oil

specification

- hose union connection
- water and oil service
- fixed to stand wall plate elbows
- ½" and ¾" sizes
- brass body
- ISO 228-1
- ANSI American taper thread
- chrome finish

DN	Connection	Code	Total (kg)
DN15 HU	½"	262001	0.28
DN20 HU	¾"	262002	0.34
DN15 HU AT	½"	262004	0.27

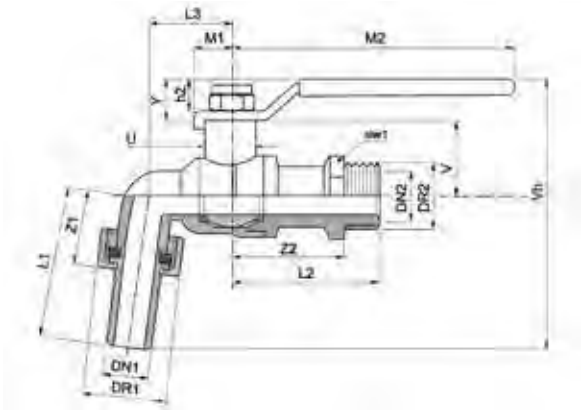

Dimensions (mm) HU

	Dr1	Dr2	DN1/DN2	h2	L1	L2	L3	M1	M2	slw1	U	V	Vh	Y	Z1	Z2
½"	20.0	30.0	DN15	12.0	37.0	52.0	37.0	100.0	11.0	25.0	17.0	28.0	97.0	16.0	12.0	40.0
¾"	37.0	25.0	DN19	12.0	40.0	52.0	37.0	100.0	11.0	28.0	17.0	28.0	100.0	16.0	12.0	40.0
½"	20.0	30.0	DN15	12.0	37.0	52.0	37.0	100.0	12.0	25.0	17.0	28.0	97.0	16.0	12.0	40.0

Material specification

Nr	Component	Material
1	Body	Brass
2	Cap	Brass
3	Ball	Brass
4	Ball seal	PTFE
5	Spindle	Brass
6	Spindle seal	NBR
7	Hose pipe	MS58 brass
8	Hose nut	MS58 brass
9	Hose union "O" ring	NBR
10	Lever nut	Brass
11	Lever handle	A3 steel
12	Lever grip	PVC
13	Gland nut	Brass
14	Flow straightener	Polyethylene
15	Lever securing screw, chrome plated	Brass

Maximum pressure conditions

Size	Max Pressure (bar)	Min/Max Temperature (°C)	Test Pressure Shell (bar)	Test Pressure Seat (bar)	Max Pressure (psi)	Min/Max Temperature (°F)	Test Pressure Shell (psi)	Test Pressure Seat (psi)
½" to ¾"	16.0	0°C + 100°C	37.5	27.5	362.6	32°F + 212°F	543.9	398.9

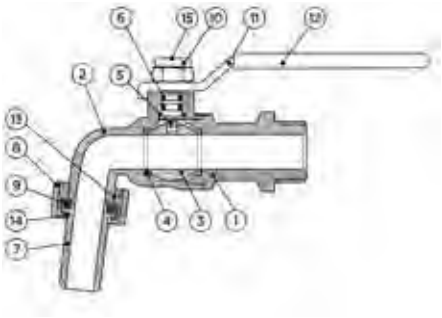

Pressure equipment directive category

All sizes classified SEP

Pressure & temperature ratings

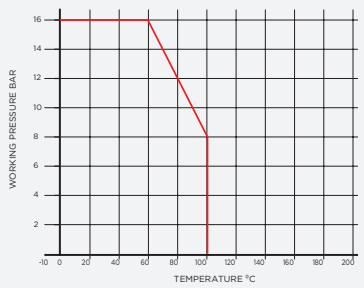

PB50AT Ball valve

water oil

specification

- hose union connection
- water and oil service
- fixed to stand wall plate elbows
- ½" size
- brass body
- ¾" American thread on nose
- ISO 228-1
- ANSI American taper thread
- chrome finish

DN	Connection	Code	Total (kg)
DN15 AT	½"	262003	0.28

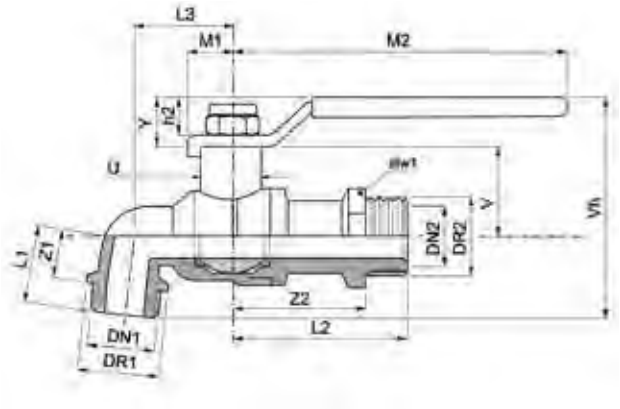

Dimensions (mm) AT

	Dr1	Dr2	DN1	h2	L1	L2	L3	M1	M2	slw1	U	V	Vh	Y	Z1	Z2
½"	30.0	20.0	DN15	12.0	29.0	52.0	37.0	100.0	100.0	25.0	17.0	28.0	79.0	16.0	17.0	40.0

Material specification

Nr	Component	Material
1	Body	Brass
2	Cap	Brass
3	Ball	Brass
4	Ball seal	PTFE
5	Spindle	Brass
6	Spindle seal	NBR
7	Lever nut	Brass
8	Lever handle	A3 steel
9	Lever grip	PVC
10	Flow straightener	Polyethylene
11	Lever securing screw, chrome plated	Brass

Maximum pressure conditions

Size	Max Pressure (bar)	Min/Max Temperature (°C)	Test Pressure Shell (bar)	Test Pressure Seat (bar)	Max Pressure (psi)	Min/Max Temperature (°F)	Test Pressure Shell (psi)	Test Pressure Seat (psi)
½"	16.0	0°C + 100°C	37.5	27.5	362.6	32°F + 212°F	543.9	398.9

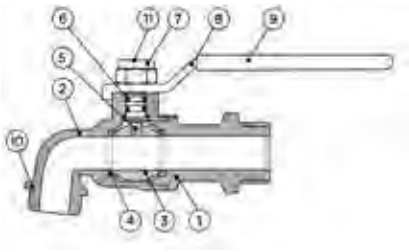

Pressure equipment directive category

All sizes classified SEP

Pressure & temperature ratings

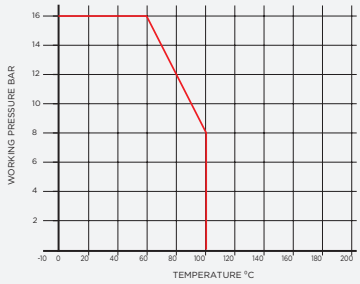

PB52 Ball valve

water oil

specification

- extended tail length 20mm
- ideal for drum or tank fixing
- ½" and ¾" sizes
- brass body
- hose union connector
- black cast lever
- chrome finish
- lockable in closed position

DN	Connection	Code	Total (kg)	Kv
DN15 HU	½"	262021	0.28	9.4
DN20 HU	¾"	262022	0.35	17.0

*Kv - flow rate in m3 per hour at a pressure drop of 1 bar.

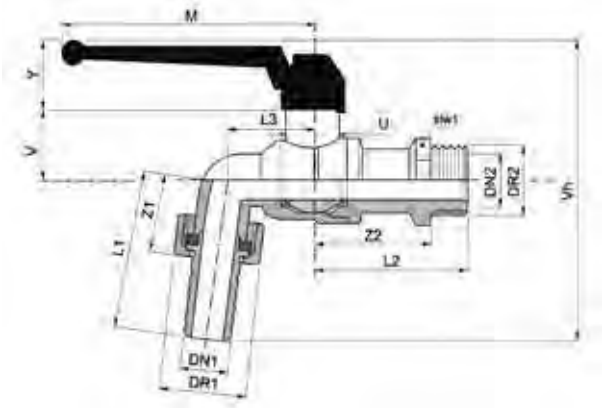

Dimensions (mm)

	Dr1	Dr2	DN1/DN2	L1	L2	L3	M	slw1	U	V	Vh	Y	Z1	Z2
½"	30.0	20.0	DN15	37.0	65.0	24.0	85.0	24.0	12.0	19.0	94.0	25.0	12.0	45.0
¾"	32.0	25.0	DN20	38.0	65.0	26.0	85.0	27.0	12.0	19.0	102.0	25.0	12.0	45.0

Material specification

Nr	Component	Material
1	Body	Brass
2	Cap	Brass
3	Ball, chrome plated	Brass
4	Ball seal	PTFE
5	Spindle	Brass
6	Spindle seal	NBR
7	Hose pipe	Brass
8	Hose nut	Brass
9	Hose union "O" ring	NBR
10	Lever securing screw, chromium plated	Brass
11	Lever	Cast aluminium, painted
12	Lever grip	PVC
13	Gland nut	Brass
14	Flow straightener	Polyethylene
15	Lever nut	Brass

Maximum pressure conditions

Size	Max Pressure (bar)	Min/Max Temperature (°C)	Test Pressure Shell (bar)	Test Pressure Seat (bar)	Max Pressure (psi)	Min/Max Temperature (°F)	Test Pressure Shell (psi)	Test Pressure Seat (psi)
½" to ¾"	16.0	0°C + 100°C	37.5	27.5	362.6	32°F + 212°F	543.9	398.9

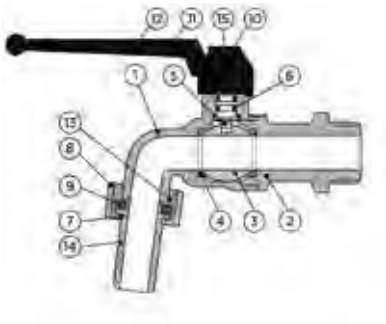

Pressure equipment directive category

All sizes classified SEP

Pressure & temperature ratings

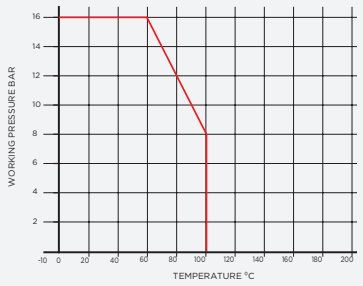

855 MOH Float valve

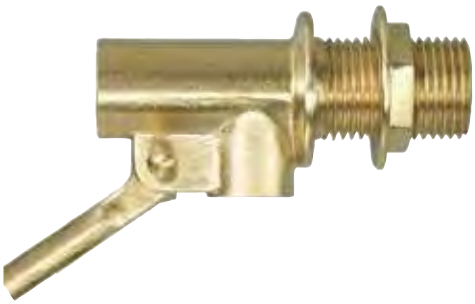

specification

- Portsmouth pattern
- high pressure
- brass body

DN	Connection	ISO7-Rc taper	Total (kg)
DN15	½"	518007	0.23
DN20	¾"	518008	0.41
DN25	1"	518009	0.66
DN32	1 ¼"	518010	0.89
DN40	1 ½"	518013	1.55
DN50	2"	518014	-
DN15 855-Z	½"	518017	0.26

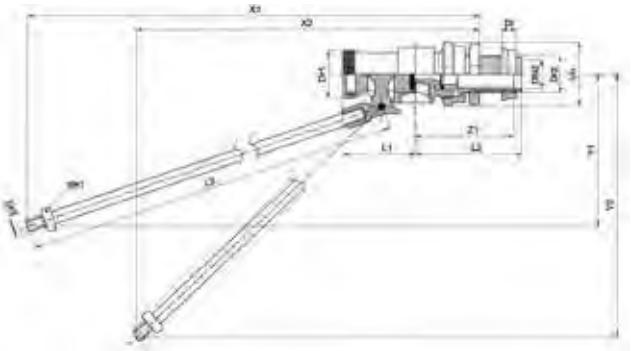

Dimensions (mm)

	D	DN1/DN2	Dr1	Dr2	Dr3	L1	L2	L3	slw1	X1	X2	Y1	Y2
DN15	23.0	½"	23.0	21.0	7.0	48.0	64.0	259.0	13.0	284.0	285.0	138.0	165.0
DN20	30.0	¾"	35.0	26.0	7.0	58.0	77.0	295.0	13.0	326.0	304.0	157.0	260.0
DN25	27.0	1"	43.0	33.0	10.0	66.0	90.0	255.0	18.0	292.0	266.0	140.0	304.0
DN32	38.0	1 ¼"	57.0	42.0	14.0	145.0	113.0	310.0	24.0	389.0	250.0	190.0	325.0
DN40	38.0	1 ½"	57.0	47.0	14.0	146.0	114.0	310.0	14.0	395.0	230.0	170.0	331.0
DN50	45.0	2"	66.0	59.0	16.0	186.0	133.0	330.0	26.0	425.0	293.0	216.0	343.0
DN15 855-Z	23.0	½"	23.0	21.0	7.0	48.0	64.0	259.0	13.0	284.0	285.0	138.0	165.0

Material specification

Nr	Component	Material
1	Body	Brass
2	Piston	Brass / Nylon
3	Piston washer	NBR
4	Cotter pin	Brass
5	Lever	Brass
6	Backnut	Brass

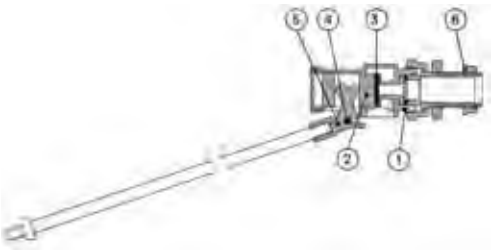

Pressure & temperature ratings

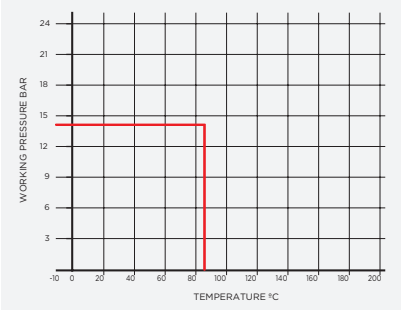

Flow rate and size selection details available in the additional information section

856 MOH Float valve

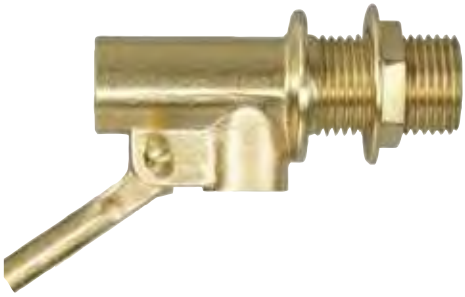

specification

- Portsmouth pattern
- low pressure
- brass body

DN	Connection	ISO7-Rc taper	Total (kg)
DN8	⅜"	519006	0.23
DN15	⅛"	519007	0.24
DN20	¾"	519008	0.41
DN15 856-Z	½"	519017	0.26

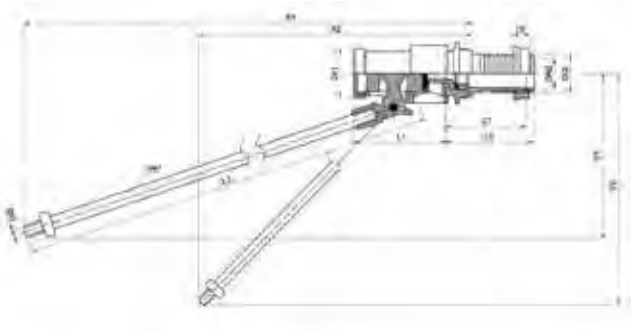

Dimensions (mm)

	D	DN1/DN2	Dr1	Dr2	Dr3	L1	L2	L3	slw1	X1	X2	Y1	Y2
DN8	23.0	⅜"	23.0	21.0	7.0	48.0	64.0	259.0	13.0	284.0	285.0	138.0	165.0
DN15	23.0	⅛"	23.0	21.0	7.0	48.0	64.0	259.0	13.0	284.0	285.0	138.0	165.0
DN20	30.0	¾"	35.0	26.0	7.0	58.0	77.0	295.0	13.0	326.0	304.0	157.0	260.0
DN15 856-Z	23.0	½"	23.0	21.0	7.0	48.0	64.0	259.0	13.0	284.0	285.0	138.0	165.0

Material specification

Nr	Component	Material
1	Body	Brass
2	Piston	Brass / Nylon
3	Piston washer	NBR
4	Cotter pin	Brass
5	Lever	Brass
6	Backnut	Brass

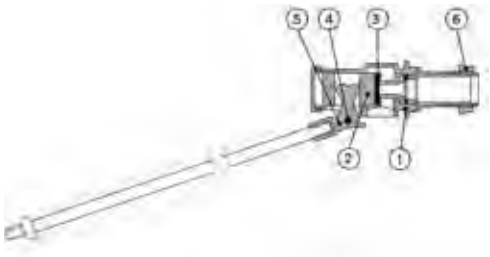

Pressure & temperature ratings

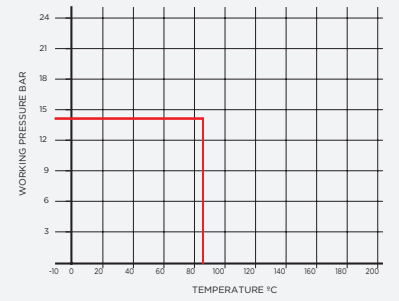

Flow rate and size selection details available in the additional information section

857B/857N Float valve

water

specification

- BS 1212 part one
- high pressure
- brass body

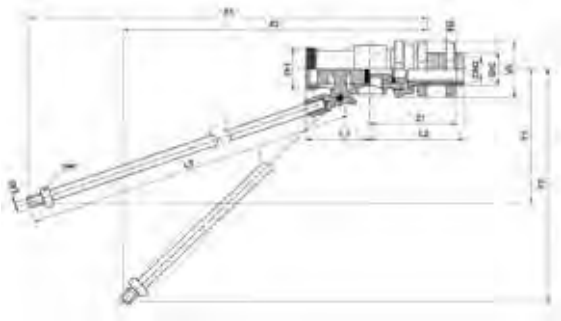

BS 1212 Part One. High pressure. Bronze seat

Pattern number	Size	Piston material	Backnut material	Seat bore	Tail length	Lever length	Code	Recommended float size: Copper	Recommended float size: Plastic	Weight approx kg
857 B-Y	½"	B	B	No3 (⅛")	1 ¼"	8 ¾"	514097	4 ½"x 5/16" W	4 ½"x 5/16" W	0.43
857 B-V	½"	B	B	No3 (⅛")	1 ⅞"	10 ½"	514127	4 ½"x 5/16" W	4 ½"x 5/16" W	0.48
857 B	¾"	B	B	No6 (¼")	1 ¼"	13"	514078	5 ½"x 5/16" W	5"x 5/16" W	0.93
857 B	1"	Bz	B	No9 (⅜")	1 ½"	16"	514079	6"x 7/16" W	6"x 7/16" W	1.66

BS 1212 Part One. High pressure. Nylon seat

Pattern number	Size	Piston material	Backnut material	Seat bore	Tail length	Lever length	Code	Copper	Plastic	Weight approx kg
857 N	½"*	N	B	No3 (⅛")	1 ¼"	8 ¾"	514007	4 ½"x 5/16" W	4 ½"x 5/16" W	0.39
857 N-Z	½"	N	N	No3 (⅛")	1 ¼"	8 ¾"	514017	4 ½"x 5/16" W	4 ½"x 5/16" W	0.33
857 N-S	½"	N	B	No5 (3/16")	1 ¼"	8 ¾"	514018	4 ½"x 5/16" W	4 ½"x 5/16" W	0.39
857 N-Y	½"	B	B	No3 (⅛")	1 ¼"	8 ¾"	514027	4 ½"x 5/16" W	4 ½"x 5/16" W	0.42
857 N-X	½"	N	B	No3 (⅛")	1 ¼"	10 ½"	514037	4 ½"x 5/16" W	4 ½"x 5/16" W	0.40
857 N-W	½"	N	B	No3 (⅛")	1 ⅞"	10 ½"	514047	4 ½"x 5/16" W	4 ½"x 5/16" W	0.43
857 N-V	½"	B	B	No3 (⅛")	1 ⅞"	10 ½"	514057	4 ½"x 5/16" W	4 ½"x 5/16" W	0.46
857 N-U	½"	N	B	No3 (⅛")	2 ½"	10 ½"	514067	4 ½"x 5/16" W	4 ½"x 5/16" W	0.44
857 N	¾"	B	B	No6 (¼")	1 ¼"	13"	514008	5 ½"x 5/16" W	5"x 5/16" W	0.89
857 N	1"	Bz	B	No9 (⅜")	1 ½"	16"	514009	6"x 7/16" W	6"x 7/16" W	1.62

Note: Shading denotes variation to standard ½". Specification key: B = Brass, N = Nylon, Bz = Bronze

Dimensions (mm)

	D	DN1/DN2	Dr1	Dr2	Dr3	L1	L2	L3	slw1	X1	X2	Y1	Y2
DN15	23.0	½"	23.0	21.0	7.0	48.0	64.0	259.0	13.0	284.0	285.0	138.0	165.0
DN20	30.0	¾"	35.0	26.0	7.0	58.0	77.0	295.0	13.0	326.0	304.0	157.0	260.0
DN25	27.0	1"	43.0	33.0	10.0	66.0	90.0	255.0	18.0	292.0	266.0	140.0	304.0

Material specification

Nr	Component	Material
1	Body	Brass
2	Body cap	Brass
3	Lever	Brass
4	Cotter pin	Brass
5	Lever nut	Brass
6	Body union nut	Brass
7	Tail pipe	Brass
8	Union nut washer	Fobre
9	Backnuts	Brass or Nylon
10	Seat	Bronze (Gunmetal) or Nylon
11	Piston	Brass
12	Piston washer	NBR
13	Cap seal	NBR

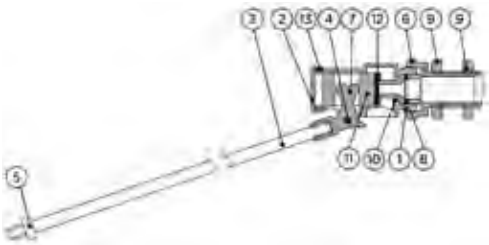

Pressure & temperature ratings

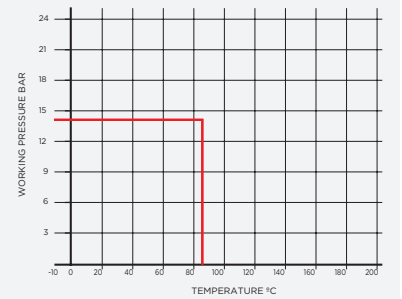

Flow rate and size selection details available in the additional information section

859B/859N Float valve

specification

- BS 1212 part one
- high pressure
- brass body

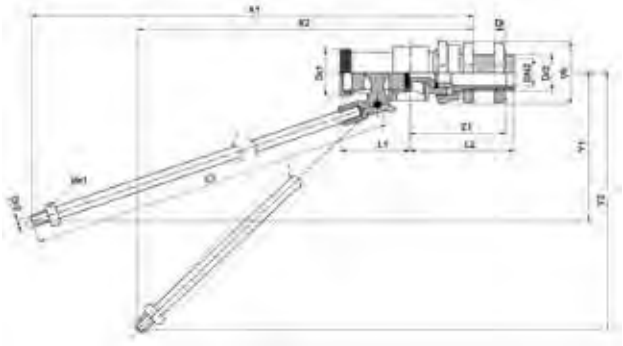

BS 1212 Part One. Low pressure. Bronze seat

Pattern number	Size	Piston material	Backnut material	Seat bore	Tail length	Lever length	Code	Recommended float size Copper	Recommended float size Plastic	Weight approx kg
859 B	½"	B	B	No9 (⅜")	1 ¼"	8 ¾"	515037	4 ½"x 5/16" W	4 ½"x 5/16" W	0.48

BS 1212 Part One. Low pressure. Nylon seat

Pattern number	Size	Piston material	Backnut material	Seat bore	Tail length	Lever length	Code	Recommended float size Copper	Recommended float size Plastic	Weight approx kg
859 N	½"	B	B	No9 (⅜")	1 ¼"	8 ¾"	515007	4 ½"x 5/16" W	4 ½"x 5/16" W	0.49
859 N-V	½"	B	B	No9 (⅜")	1 ⅞"	10 ½"	515027	4 ½"x 5/16" W	4 ½"x 5/16" W	0.50
859 N	¾"	B	B	No13 (½")	1 ¼"	13"	515008	5 ½"x 5/16" W	5"x 5/16" W	0.90

Note: Shading denotes variation to standard ½". Specification key: B = Brass, N = Nylon, Bz = Bronze

Dimensions (mm)

	D	DN1/DN2	Dr1	Dr2	Dr3	L1	L2	L3	slw1	X1	X2	Y1	Y2
DN13	23.0	½"	23.0	21.0	7.0	48.0	64.0	259.0	13.0	284.0	285.0	138.0	165.0
DN14	23.0	½"	23.0	21.0	7.0	48.0	64.0	259.0	13.0	284.0	285.0	138.0	165.0
DN21	30.0	¾"	35.0	26.0	7.0	58.0	77.0	295.0	13.0	326.0	304.0	157.0	260.0

Material specification

Nr	Component	Material
1	Body	Brass
2	Body cap	Brass
3	Lever	Brass
4	Cotter pin	Brass
5	Lever nut	Brass
6	Body union nut	Brass
7	Tail pipe	Brass
8	Union nut washer	Fobre
9	Backnuts	Brass or Nylon
10	Seat	Bronze (Gunmetal) or Nylon
11	Piston	Brass
12	Piston washer	NBR
13	Cap seal	NBR

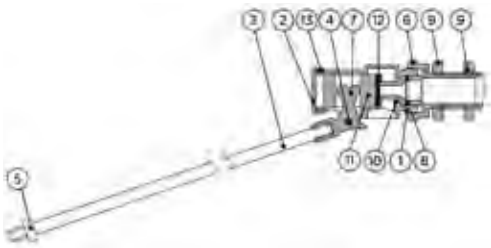

Pressure & temperature ratings

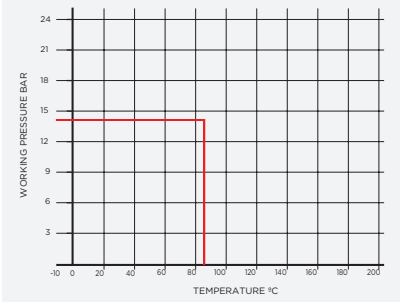

Flow rate and size selection details available in the additional information section

901 Equilibrium float valve

specification

- equilibrium pattern
- ½" and 6" sizes
- brass body ½" to 1"
- maximum operating pressure 10 bar
- bronze (gunmetal) 1 ¼" to 6"

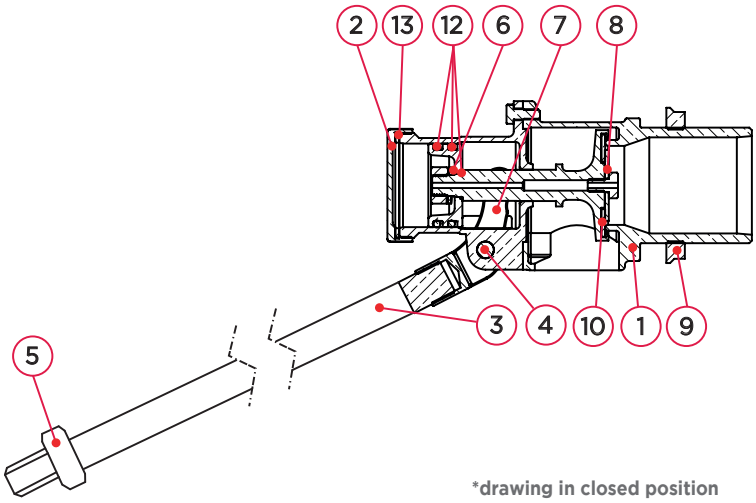

*drawing in closed position

Nr	Component	Material
1	Body	Brass ½" to 1" Bronze (Gunmetal) 1 ¼" to 6"
2	Body cap	Brass
3	Lever	Brass
4	Cotter pin	Brass
5	Lever nut	Brass
6	Spring washer	Stainless Steel
7	Lever heel	Brass
8	Washer	Stainless Steel
9	Backnuts	Brass or Nylon
10	Seat	Bronze
11	Piston	Brass
12	O-ring	NBR
13	Cap seal	NBR

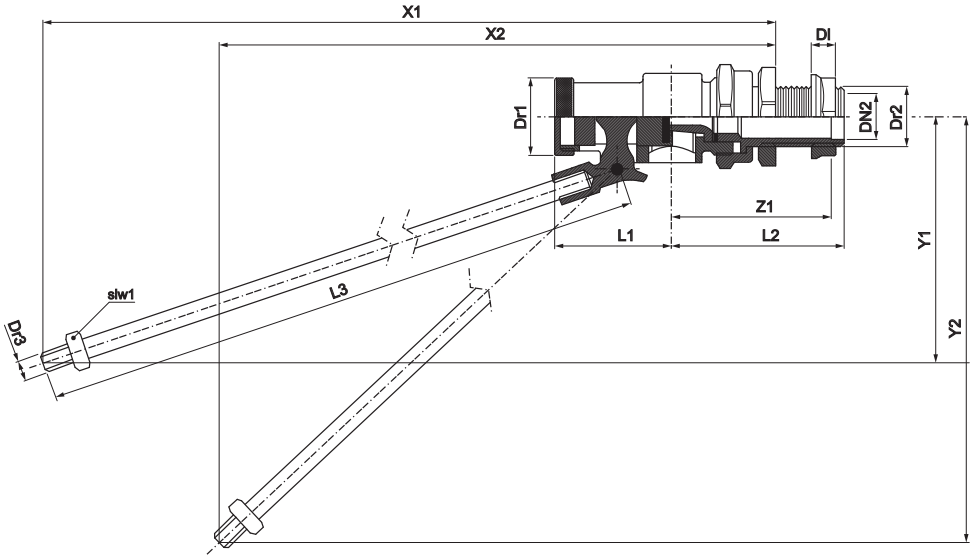

Dimensions (mm)

	D	DN1/DN2	Dr1	Dr2	Dr3	L1	L2	L3	slw1	X1	X2	Y1	Y2
DN15	23.0	½"	23.0	21.0	7.0	48.0	64.0	259.0	13.0	284.0	285.0	138.0	165.0
DN20	30.0	¾"	35.0	26.0	7.0	58.0	77.0	295.0	13.0	326.0	304.0	157.0	260.0
DN25	27.0	1"	43.0	33.0	10.0	66.0	90.0	255.0	18.0	292.0	266.0	140.0	304.0
DN32	38.0	1 ¼"	57.0	42.0	14.0	145.0	113.0	310.0	24.0	389.0	250.0	190.0	325.0
DN40	38.0	1 ½"	57.0	47.0	14.0	146.0	114.0	310.0	14.0	395.0	230.0	170.0	331.0
DN50	45.0	2"	66.0	59.0	16.0	186.0	133.0	330.0	26.0	425.0	293.0	216.0	343.0
DN65	58.0	2 ½"	71.0	75.0	15.0	193.0	115.0	475.0	-	495.0	385.0	295.0	422.0
DN80	65.0	3"	85.0	88.0	20.0	226.0	134.0	502.0	-	570.0	450.0	280.0	435.0
DN100	78.0	4"	102.0	112.0	20.0	272.0	158.0	530.0	-	615.0	460.0	300.0	490.0
DN150	108.0	6"	130.0	163.0	22.0	368.0	202.0	592.0	-	695.0	465.0	390.0	604.0

Flow rate and size selection details available in the additional information section

901 Equilibrium float valve

Range								Recommended float size		
DN	**Size**	**Piston material**	**Backnut material**	**Seat bore**	**Tail length**	**Lever length**	**Code**	**Copper**	**Plastic**	**Weight approx kg**
DN15	½″	Brass	Brass	5/16″	1 ¼″	11″	520007	4 ½″x 5/16″ W	4 ½″x 5/16″ W	0.42
DN20	¾″	Brass	Brass	½″	1 ¼″	12 7/8″	520008	5 ½″x 5/16″ W	5″x 5/16″ W	0.91
DN25	1″	Brass	Brass	¾″	1 ½″	10 1/16″	520009	6″x 7/16″ W	6″x 7/16″ W	1.56
DN32	1 ¼″	Bronze	Bronze	1 1/64″	1 7/8″	10 5/16″	520010	8″x 9/16″ W		3.25
DN40	1 ½″	Bronze	Bronze	1 3/16″	1 7/8″	10 5/16″	520011	10″x 9/16″ W	10″x 9/16″ W	3.35
DN50	2″	Bronze	Bronze	1 ½″	2 1/8″	11 1/8″	520012	12″x 5/8″ W	12″x 5/8″ W	5.58
DN65	2 ½″	Bronze	Bronze	2 ¼″	3″	19″	520300	12″x 9/16″ W (Claw)	**Not Recommended**	4.83
DN80	3″	Bronze	Bronze	2 ½″	3 ½″	20″	520305	14″x ¾″ W (Claw)		7.76
DN100	4″	Bronze	Bronze	3″	4″	21″	520310	15″x ¾″ W (Claw)		12.12
DN150	6″	Bronze	Bronze	4″	5″	23″	520315	16″x 7/8″ W (Claw)		25.62

Note: Where two sizes or two patterns of floatvalve are capable of providing the required flow rate, select the smaller size if the indicated flow rate is more than 10% in excess of the flow rate required.

Floats (for Pegler float operated valves)

Range	Code	Connection to lever arm*	Total (kg)
3″ x 5/16″ W	596022	5/16″ W	0.03
4 ½″ x 5/16″ W	596032	5/16″ W	0.092
5″ x 5/16″ W	596033	5/16″ W	0.114
6″ x 3/8″ W	596025	3/8″ W	0.168
6″ x 7/16″ W	596026	7/16″ W	0.170
8″ x 3/8″ W	596028	3/8″ W	0.408
10″ x ½″ W	596029	½″ W	0.803
10″ x 9/16″ W	596036	9/16″ W	0.690
12″ x ½″ W	596038	½″ W	0.788
12″ x 5/8″ W	596031	5/8″ W	0.914

specification

- plastic or copper ball
- stud or claw attachment

Copper float sizes

Range	Code	Total (kg)
4 ½″	596001	0.121
5 ½″	596003	0.183
6″	596004	0.219
8″	596006	0.442
10″	596008	0.686
12″	596009	1.005
14″	596010	2.420
15″	596011	2.390
16″	596012	2.766

Brass studs for copper floats. Required for copper float 4 ½″ to 12″

Connection to lever arm*	Code	Total (kg)
5/16″ W	596039	0.020
3/8″ W	596040	0.020
7/16″ W	596041	0.055
½″ W	596042	0.104
9/16″ W	596043	0.098
5/8″ W	596044	0.187

Claws for copper floats. Required for copper float 12″ to 16″

Connection to lever arm*	Code	Total (kg)
9/16″ W	596047	0.332
¾″ W	596048	0.313
7/8″ W	596049	0.532

* W - Whitworth thread

Note: Studs generally required for float valves up to 2″, Claws for 2½″ - 6″ valves.
Note: Ball floats are only supplied in export shipments.

79 Angle valve

specification

- hot or cold
- male iron x male iron
- metal seat
- brass body
- includes rosette

Connection	Code	Total (kg)
½"	510052	0.22

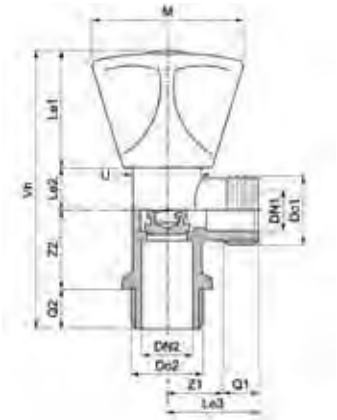

Dimensions (mm)

	Do1/Do2	DN1/DN2	Le1	Le2	Le3	M	Q1	Q2	U	Vh	Z1	Z2
½"	21.0	½"	34.0	12.0	26.0	36.0	10.0	15.0	20.0	86.0	16.0	25.0

Material specification

Nr	Component	Material
1	Body	Brass
2	Headwork	Brass
3	Stem	Brass
4	Seat	Brass
5	Indice	Plastic
6	Circlip	Steel
7	Handle	Zinc alloy

Maximum pressure conditions

Size	Max Pressure (bar)	Min/Max Temperature (°C)	Test Pressure Shell (bar)	Test Pressure Seat (bar)	Max Pressure (psi)	Min/Max Temperature (°F)	Test Pressure Shell (psi)	Test Pressure Seat (psi)
½"	10.0	4° + 120°F	15.0	11.0	145.0	39.2° + 248°F	217.5	159.5

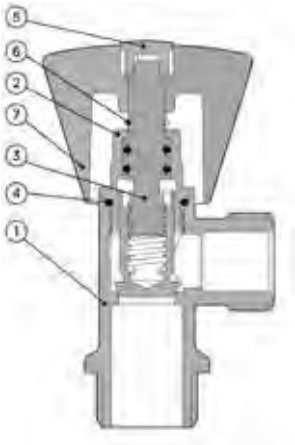

Pressure & temperature ratings

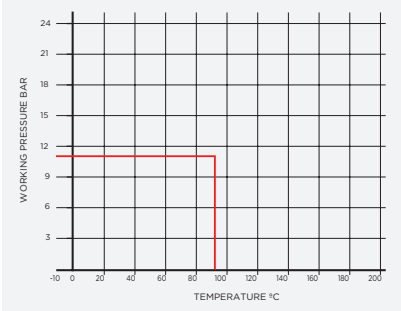

78 Angle valve

specification

- hot or cold
- male iron x male iron
- soft seat
- brass body
- includes rosette

Connection	Code	Total (kg)
½"	510060	0.21

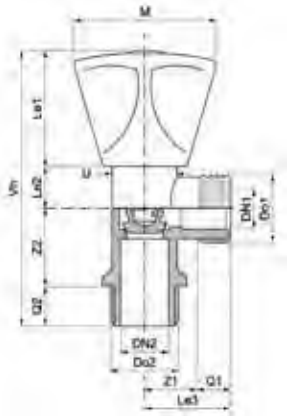

Dimensions (mm)

	Do1/Do2	DN1/DN2	Le1	Le2	Le3	M	Q1	Q2	U	Vh	Z1	Z2
½"	21.0	½"	34.0	12.0	26.0	36.0	7.0	15.0	20.0	86.0	19.0	25.0

Material specification

Nr	Component	Material
1	Body	Brass
2	Headwork	Brass
3	Stem	Brass
4	Seat	Brass
5	Indice	NBR
6	Circlip	Steel
7	Handle	Zinc alloy

Maximum pressure conditions

Size	Max Pressure (bar)	Min/Max Temperature (°C)	Test Pressure Shell (bar)	Test Pressure Seat (bar)	Max Pressure (psi)	Min/Max Temperature (°F)	Test Pressure Shell (psi)	Test Pressure Seat (psi)
½"	10.0	4° + 120°F	15.0	11.0	145.0	39.2° + 248°F	217.5	159.5

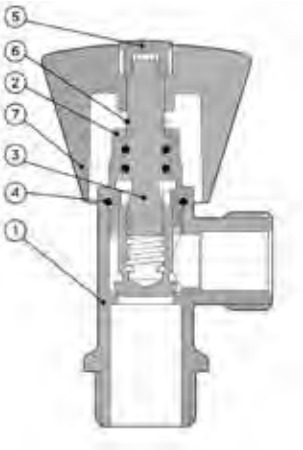

Pressure & temperature ratings

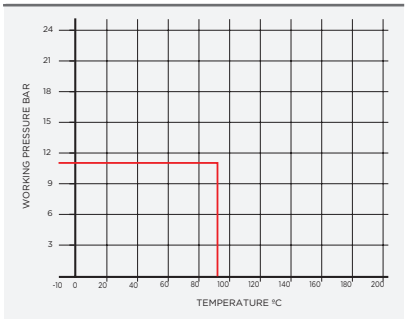

77 Angle valve

specification

- TW three point handle
- brass body
- includes rosette

Connection	Code	Total (kg)
½" x ½"	510045	0.24
½" x ⅜"	510047	0.20

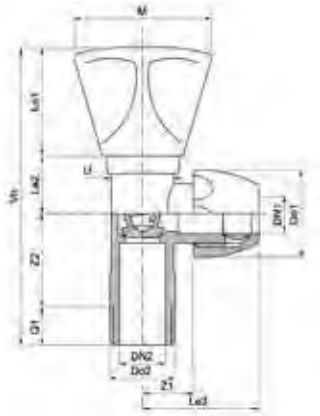

Dimensions (mm)

	DN1	DN2	Do1	Do2	Le1	Le2	Le3	M	Q1	U	Vh	Z1	Z2
½" x ½"	½"	½"	24.0	21.0	36.0	23.0	37.0	38.0	7.0	17.0	106.0	17.0	40.0
½" x ⅜"	½"	⅜"	24.0	21.0	36.0	23.0	37.0	38.0	7.0	17.0	106.0	17.0	40.0

Material specification

Nr	Component	Material
1	Body	Brass
2	Headwork	Brass
3	Stem	Brass
4	Compression nut	Brass
5	Compression olive	Brass
6	Handle	Zinc alloy
7	"O" ring	NBR
8	Circlip	Steel 65MN
9	Handle 'core'	Nylon
10	Washers	NBR

Maximum pressure conditions

Size	Max Pressure (bar)	Min/Max Temperature (°C)	Test Pressure Shell (bar)	Test Pressure Seat (bar)	Max Pressure (psi)	Min/Max Temperature (°F)	Test Pressure Shell (psi)	Test Pressure Seat (psi)
½"	10.0	4° + 120°F	15.0	11.0	145.0	39.2° + 248°F	217.5	159.5

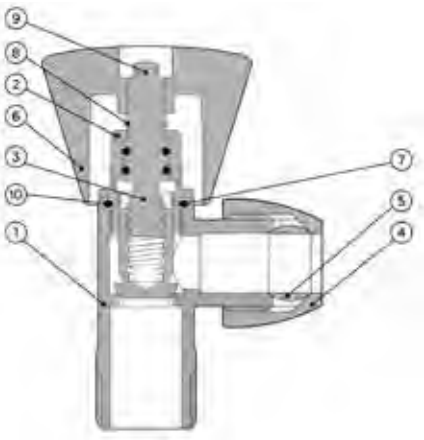

Pressure & temperature ratings

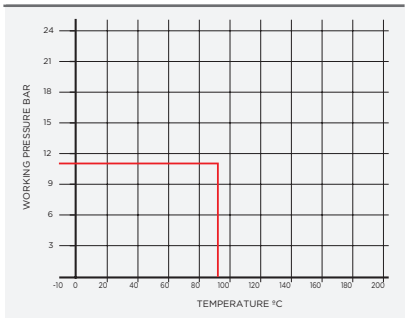

76 Angle valve

specification

- hot or cold water
- male x compression
- brass body
- includes rosette

Connection	Code	Total (kg)
½" x ⅜"	510040	0.16
½" x ½"	510041	0.16

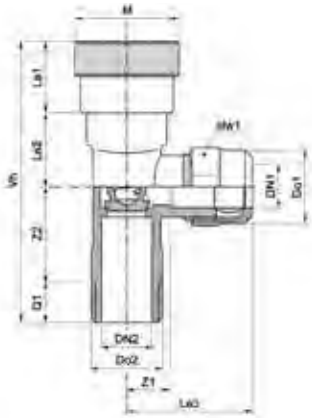

Dimensions (mm)

	DN1	DN2	Do1	Do2	Le1/Le2	Le3	M	Q1	U	Vh	Z1	Z2
½" x ⅜"	½"	⅜"	19.0	21.0	22.0	40.0	26.0	7.0	16.0	91.0	20.0	40.0
½" x ½"	½"	½"	19.0	21.0	22.0	40.0	26.0	7.0	16.0	91.0	20.0	40.0

Material specification

Nr	Component	Material
1	Body	Brass
2	Headwork	Brass
3	Stem	Brass
4	Washer	NBR
5	Compression nut	Brass
6	Compression olive	Brass
7	Handle	ABS
8	"O" ring	NBR

Maximum pressure conditions

Size	Max Pressure (bar)	Min/Max Temperature (°C)	Test Pressure Shell (bar)	Test Pressure Seat (bar)	Max Pressure (psi)	Min/Max Temperature (°F)	Test Pressure Shell (psi)	Test Pressure Seat (psi)
½"	10.0	4° + 120°F	15.0	11.0	145.0	39.2° + 248°F	217.5	159.5

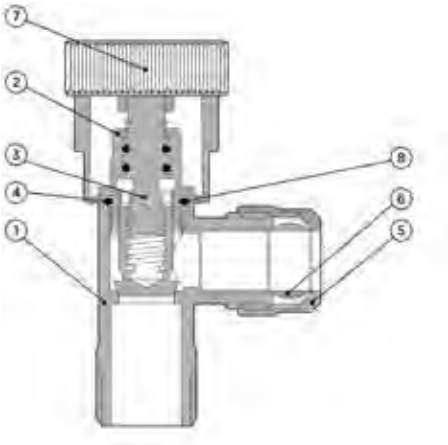

Pressure & temperature ratings

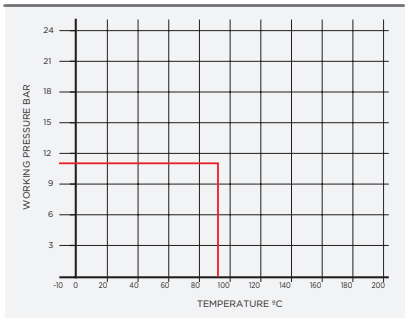

89 Stopvalve

specification

- hot or cold
- female iron x female iron
- brass body
- includes rosette

Connection	Code	Total (kg)
½"	510100	0.35
¾"	510101	0.40

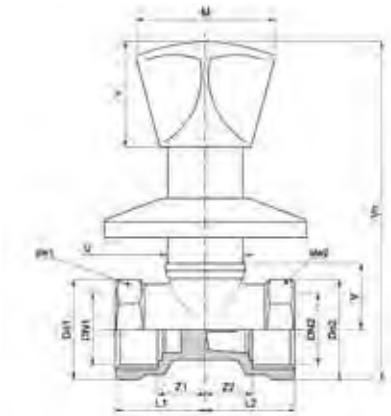

Dimensions (mm)

	DN1/DN2	Do1/Do2	L1/L2	M	slw1/slw2	U	V	Vh	Y	Z1/Z2
½"	½"	27.0	27.0	44.0	37.0	20.0	16.0	117.0	36.0	19.0
¾"	¾"	35.0	30.0	44.0	35.0	21.0	13.0	113.0	35.0	22.0

Material specification

Nr	Component	Material
1	Body	Brass
2	Headwork	Brass
3	Sleeve	Brass
4	Jumper washer	FPM
5	Handle	Zinc alloy
6	Indice	Plastic

Maximum pressure conditions

Size	Max Pressure (bar)	Min/Max Temperature (°C)	Test Pressure Shell (bar)	Test Pressure Seat (bar)	Max Pressure (psi)	Min/Max Temperature (°F)	Test Pressure Shell (psi)	Test Pressure Seat (psi)
½"	16.0	4° + 120°F	24.0	17.5	232.1	39.2° + 248°F	348.1	253.8

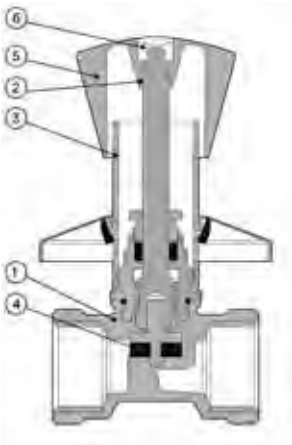

Pressure & temperature ratings

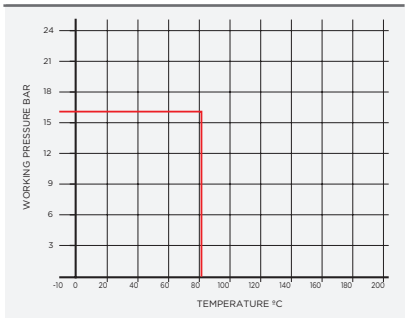

59 Stopvalve

specification

- crutch top
- compression x compression
- PN16 rating at 30°C (all sizes)
- brass body
- PN10 rated at 90°C (15mm and 22mm)
- PN10 rated at 85°C (28mm)
- BS1010

Connection	Code	Total (kg)
15mm	501007	0.36
22mm	501008	0.58
28mm	501009	1.16

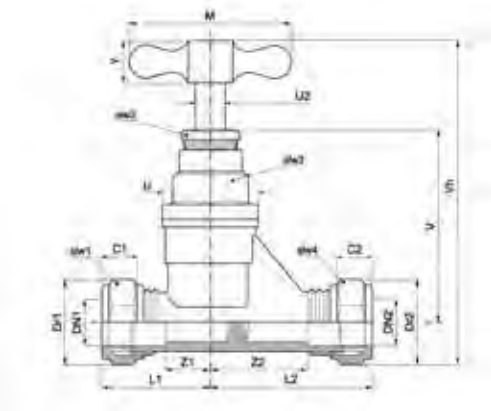

Dimensions (mm)

	DN1/DN2	C1/C2	Dr1/Dr2	L1	L2	M	slw1/slw4	slw2	slw3	U	U2	V	Vh	Y	Z1/Z2
15mm	15mm	13.0	26.0	33.0	51.0	55.0	24.0	18.0	16.0	29.0	9.0	38.0	110.0	14.0	20.0
22mm	22mm	15.0	32.0	47.0	47.0	62.0	32.0	22.0	18.0	37.0	11.0	27.0	110.0	15.0	24.0
28mm	28mm	17.0	41.0	58.0	58.0	68.0	41.0	27.0	22.0	48.0	13.0	86.0	135.0	18.0	35.0

Material specification

Nr	Component	Material
1	Handle	Brass
2	Spindle	Brass
3	Gland screw	Brass
4	Packing	Nylon 66
5	Head	CW617N brass
6	Head washer	Vulcanised fibre (type PG)
7	Body	Brass
8	Valve	Brass
9	Valve washer	EPDM
10	Cone	Brass tube
11	Capnut	Brass

Maximum pressure conditions

Size	Max Pressure (bar)	Min/Max Temperature (°C)	Test Pressure Shell (bar)	Test Pressure Seat (bar)	Max Pressure (psi)	Min/Max Temperature (°F)	Test Pressure Shell (psi)	Test Pressure Seat (psi)
15mm to 28mm	16.0	4° + 90°F	24.0	17.5	232.1	39.2° + 194°F	348.1	253.8

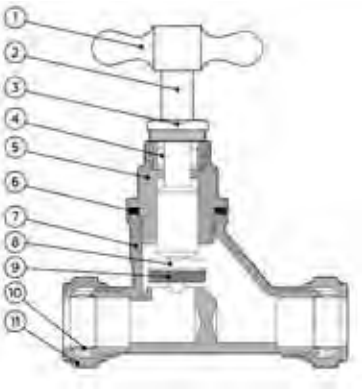

Pressure & temperature ratings

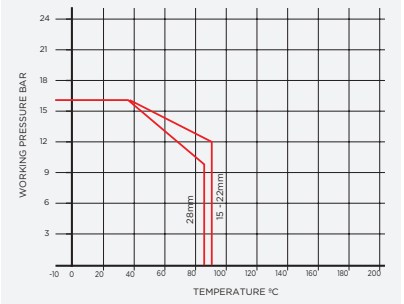

GM59 Stopvalve

specification

- crutch top
- compression x compression
- PN16 rating at 30°C (all sizes)
- bronze (gunmetal) body
- PN10 rated at 90°C (15mm and 22mm)
- PN10 rated at 85°C (28mm)
- BS1010

Connection	Code	Total (kg)
15mm	501047	0.36
22mm	501048	0.58

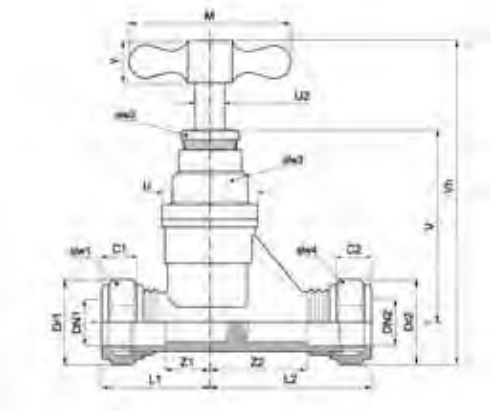

Dimensions (mm)

	DN1/DN2	C1/C2	Dr1/Dr2	L1	L2	M	slw1/slw4	slw2	slw3	U	U2	V	Vh	Y	Z1/Z2
15mm	15mm	13.0	26.0	33.0	51.0	55.0	24.0	18.0	16.0	29.0	9.0	38.0	110.0	14.0	20.0
22mm	22mm	15.0	32.0	47.0	47.0	62.0	32.0	22.0	18.0	37.0	11.0	27.0	110.0	15.0	24.0

Material specification

Nr	Component	Material
1	Handle	Brass
2	Spindle	Brass
3	Gland screw	Brass
4	Packing	Nylon 66
5	Head	Brass
6	Head washer	Vulcanised fibre (type PG)
7	Body	Bronze (Gunmetal)
8	Valve	Brass
9	Valve washer	EPDM
10	Cone	Brass tube
11	Capnut	Brass

Maximum pressure conditions

Size	Max Pressure (bar)	Min/Max Temperature (°C)	Test Pressure Shell (bar)	Test Pressure Seat (bar)	Max Pressure (psi)	Min/Max Temperature (°F)	Test Pressure Shell (psi)	Test Pressure Seat (psi)
15mm to 28mm	16.0	4° + 90°F	24.0	17.5	232.1	39.2° + 194°F	348.1	253.8

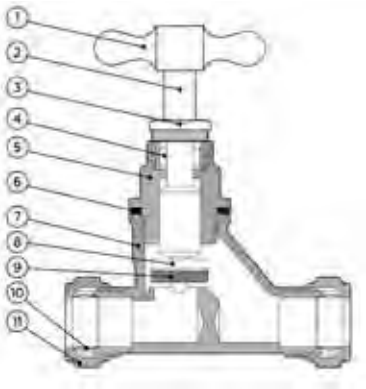

Pressure & temperature ratings

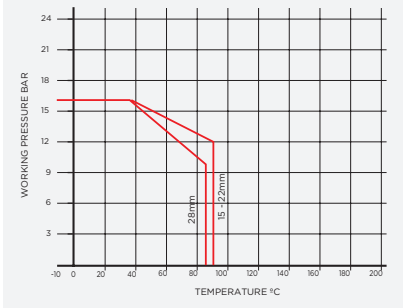

59EC CP Stopvalve

specification

- crutch top
- chrome finish
- hot and cold option
- compression x compression
- CC754S brass body
- PN16 rating at 30°C (all sizes)
- PN10 rated at 90°C (15mm and 22mm)
- PN10 rated at 85°C (28mm)

Connection	Code	Total (kg)
15mm	501207	0.40
15mm	501217	0.40

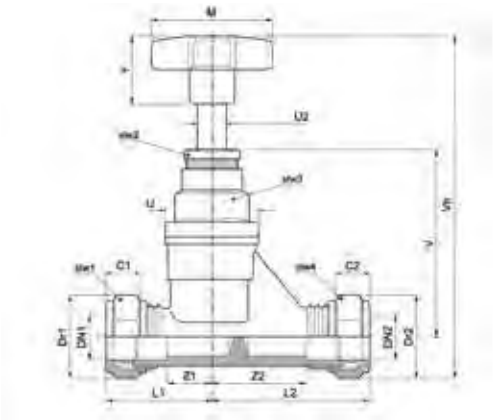

Dimensions (mm)

	DN1/DN2	C1/C2	Dr1/Dr2	L1	L2	M	slw1/slw3	slw2	U	U2	V	Vh	Y	Z1	Z2
15mm	15mm	12.0	27.0	33.0	51.0	54.0	25.0	18.0	29.0	9.0	27.0	113.0	23.0	36.0	17.0
15mm	22mm	12.0	27.0	33.0	51.0	54.0	25.0	18.0	29.0	9.0	27.0	113.0	23.0	36.0	17.0

Material specification

Nr	Component	Material
1	Handle	Brass
2	Spindle	Brass
3	Gland screw	Brass
4	Packing	Nylon 66
5	Head	Brass
6	Head washer	Vulcanised fibre (type PG)
7	Body	Brass
8	Valve	Brass
9	Valve washer	EPDM
10	Cone	Brass tube
11	Capnut	Brass

Maximum pressure conditions

Size	Max Pressure (bar)	Min/Max Temperature (°C)	Test Pressure Shell (bar)	Test Pressure Seat (bar)	Max Pressure (psi)	Min/Max Temperature (°F)	Test Pressure Shell (psi)	Test Pressure Seat (psi)
15mm	16.0	4° + 90°F	24.0	17.5	232.1	39.2° + 194°F	348.1	253.8

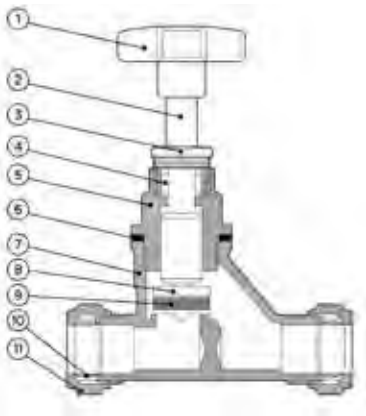

Pressure & temperature ratings

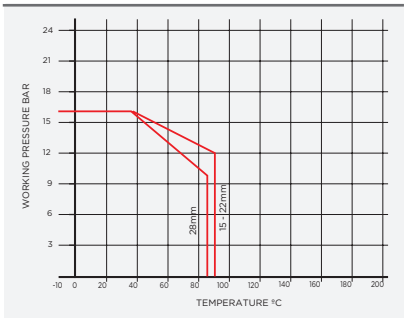

709 Stopvalve

specification

- crutch top
- female iron x female iron
- brass body

Connection	Code	Total (kg)
½"	510007	0.22
¾"	510008	0.42

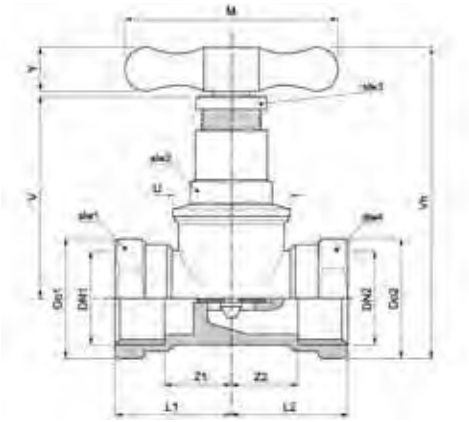

Dimensions (mm)

	DN1/DN2	Do1/Do2	L1/L2	M	slw1/slw4	slw2	slw3	U	V	Vh	Y	Z1/Z2
½"	½"	30.0	27.0	50.0	30.0	16.0	18.0	27.0	39.0	74.0	10.0	19.0
¾"	¾"	37.0	32.0	50.0	37.0	17.0	21.0	30.0	46.0	88.0	10.0	23.0

Material specification

Nr	Component	Material
1	Body	Forged brass
2	Backnut	Forged brass
3	Anti-rotational washer	Polyethelene
4	Head	Brass bar
5	Spindle	Brass bar
6	Handle	Polyethelene
7	Valve	Brass bar
8	Gland	Brass bar
9	Packing	Plastic
10	Seals	Rubber

Maximum pressure conditions

Size	Max Pressure (bar)	Min/Max Temperature (°C)	Test Pressure Shell (bar)	Test Pressure Seat (bar)	Max Pressure (psi)	Min/Max Temperature (°F)	Test Pressure Shell (psi)	Test Pressure Seat (psi)
½" to ¾"	16.0	4° + 120°F	24.0	17.5	232.1	39.2° + 248°F	348.1	253.8

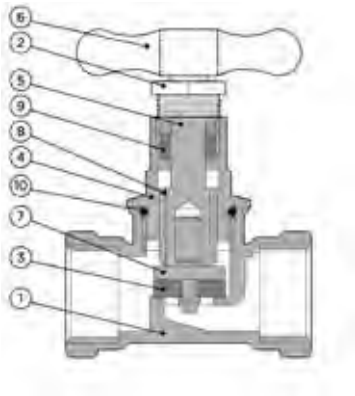

Pressure & temperature ratings

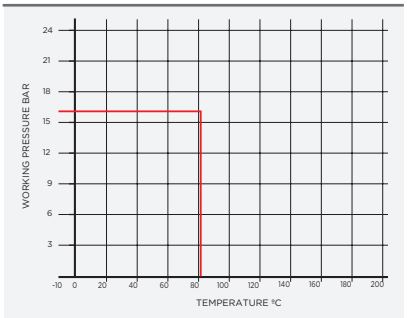

744F Stopvalve

specification

- BS1010
- crutch top
- female iron x female iron
- brass body

DN	Connection	ISO7-Rc taper	Total (kg)
DN15	½"	513007	0.35
DN20	¾"	513008	0.51
DN25	1"	513009	1.09
DN32	1 ¼"	513010	1.65
DN40	1 ½"	513011	2.19
DN50	2"	513012	4.03

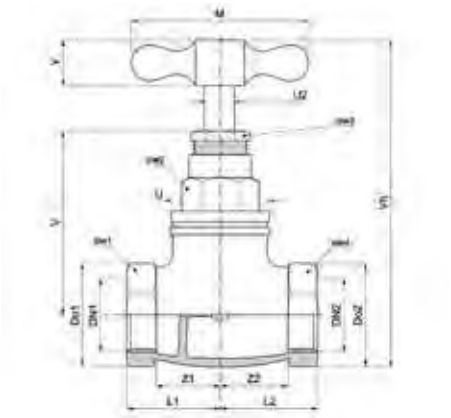

Dimensions (mm)

	DN1/DN2	Do1/Do2	L1/L2	M	slw1/slw4	slw2	slw3	U	U2	V	Vh	Y	Z1/Z2
DN15	½"	26.0	31.0	50.0	26.0	24.0	18.0	30.0	10.0	30.0	111.0	14.0	23.0
DN20	¾"	34.0	34.0	50.0	34.0	27.0	21.0	38.0	11.0	33.0	111.0	14.0	24.0
DN25	1"	48.0	43.0	68.0	48.0	27.0	21.0	54.0	12.0	45.0	141.0	18.0	31.0
DN32	1 ¼"	60.0	48.0	75.0	60.0	32.0	25.0	63.0	12.0	48.0	166.0	20.0	36.0
DN40	1 ½"	65.0	52.0	84.0	65.0	35.0	28.0	71.0	16.0	53.0	176.0	22.0	37.0
DN50	2"	82.0	67.0	95.0	82.0	38.0	28.0	90.0	17.0	60.0	215.0	26.0	51.0

Material specification

Nr	Component	Material
1	Body	Forged brass
2	Head	Brass
3	Spindle	Brass
4	Handle	Brass
5	Valve	Brass
6	Gland	Brass
7	Packing	PTFE
8	Seal	EPDM

Maximum pressure conditions

Size	Max Pressure (bar)	Min/Max Temperature (°C)	Test Pressure Shell (bar)	Test Pressure Seat (bar)	Max Pressure (psi)	Min/Max Temperature (°F)	Test Pressure Shell (psi)	Test Pressure Seat (psi)
½" to 2"	16.0	4° + 120°F	24.0	17.5	232.1	39.2° + 248°F	348.1	253.8

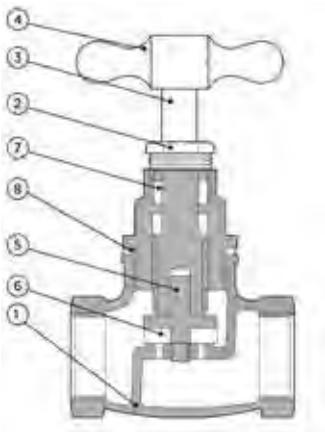

Pressure & temperature ratings

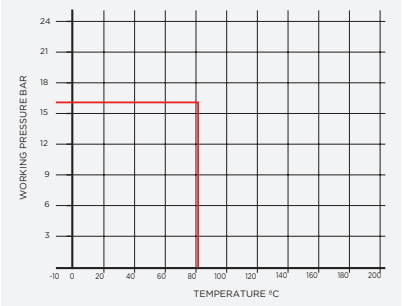

701 Bibtap

specification

- crutch top
- brass body

DN	Connection	Code	Total (kg)
DN15	½"	509011	0.30
DN20	¾"	509013	0.53

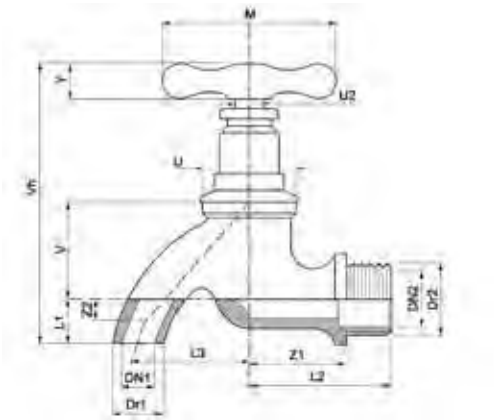

Dimensions (mm)

	Dn1	Dn2	Dr1	Dr2	L1	L2	L3	M	U	U2	V	Vh	Y	Z1	Z2
DN15	10.0	½"	14.0	20.0	10.0	42.0	32.0	50.0	30.0	8.0	28.0	81.0	13.0	35.0	6.0
DN20	10.0	¾"	19.0	26.0	15.0	47.0	38.0	50.0	38.0	8.0	37.0	98.0	13.0	38.0	6.0

Material specification

Nr	Component	Material
1	Body	Forged brass
2	Head	Brass bar
3	Spindle	Brass bar
4	Handle	Forged brass
5	Valve	Brass bar
6	Gland	Brass bar
7	Packing	PTFE
8	Seal	Rubber

Maximum pressure conditions

Size	Max Pressure (bar)	Min/Max Temperature (°C)	Test Pressure Shell (bar)	Test Pressure Seat (bar)	Max Pressure (psi)	Min/Max Temperature (°F)	Test Pressure Shell (psi)	Test Pressure Seat (psi)
½" to ¾"	10.0	4° + 120°F	15.0	11.0	145.0	39.2° + 248°F	217.5	159.5

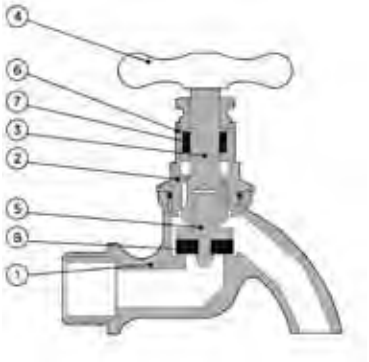

723 Bibtap

specification

- crutch top
- hose union
- brass body

Connection	Code	Total (kg)
½"	511007	0.30
¾"	511008	0.53

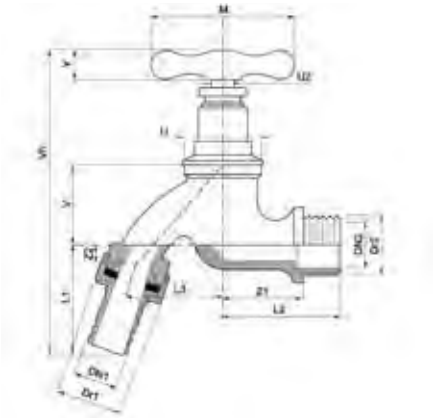

Dimensions (mm)

	DN1/DN2	Dr1	Dr2	L1	L2	L3	M	U	U2	V	Vh	Y	Z1	Z2
½"	½"	24.0	22.0	29.0	41.0	50.0	50.0	30.0	8.0	31.0	108.0	14.0	28.0	21.0
¾"	¾"	30.0	25.0	40.0	46.0	50.0	50.0	30.0	8.0	39.0	128.0	14.0	32.0	21.0

Material specification

Nr	Component	Material
1	Body	Forged brass
2	Backnut	Forged brass
3	Anti-rotational washer	Polyethelene
4	Head	Brass bar
5	Spindle	Brass bar
6	Handle	Forged brass
7	Valve	Brass bar
8	Gland	Brass bar
9	Packing	Plastic
10	Seals	Rubber

Maximum pressure conditions

Size	Max Pressure (bar)	Min/Max Temperature (°C)	Test Pressure Shell (bar)	Test Pressure Seat (bar)	Max Pressure (psi)	Min/Max Temperature (°F)	Test Pressure Shell (psi)	Test Pressure Seat (psi)
½" to ¾"	10.0	4° + 120°F	15.0	11.0	145.0	39.2° + 248°F	217.5	159.5

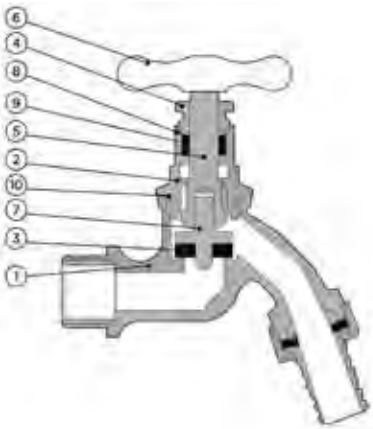

723AT Bibtap

specification

- crutch top
- brass body
- ¾" American thread on nose

Connection	Code	Total (kg)
½"	511037	0.30

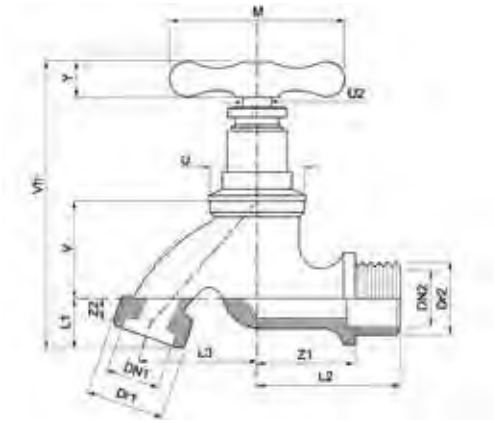

Dimensions (mm)

	DN1/DN2	Dr1	Dr2	L1	L2	L3	M	U	U2	V	Vh	Y	Z1	Z2
½"	½"	28.0	22.0	21.0	41.0	36.0	50.0	26.0	8.0	27.0	96.0	14.0	28.0	10.0

Material specification

Nr	Component	Material
1	Body	Forged brass
2	Backnut	Forged brass
3	Anti-rotational washer	Polyethelene
4	Head	Brass bar
5	Spindle	Brass bar
6	Handle	Forged brass
7	Valve	Brass bar
8	Gland	Brass bar
9	Packing	Plastic
10	Seals	Rubber

Maximum pressure conditions

Size	Max Pressure (bar)	Min/Max Temperature (°C)	Test Pressure Shell (bar)	Test Pressure Seat (bar)	Max Pressure (psi)	Min/Max Temperature (°F)	Test Pressure Shell (psi)	Test Pressure Seat (psi)
½"	10.0	4° + 90°C	15.0	11.0	145.0	39° + 194°F	217.5	159.5

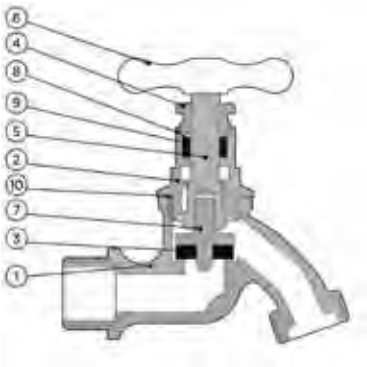

141 Bibtap

specification

- crutch top
- BS1010
- forged brass body

Connection	Code	Total (kg)
½"	508017	0.40
¾"	508018	0.64

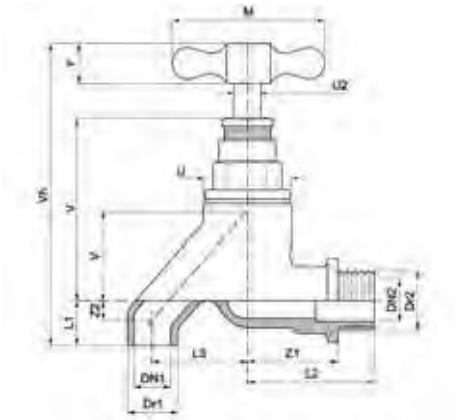

Dimensions (mm)

	DN1/DN2	Dr1	Dr2	L1	L2	L3	M	U	U2	V	Vh	Y	Z1	Z2
½"	½"	18.0	21.0	14.0	44.0	36.0	54.0	30.0	10.0	63.0	109.0	15.0	4.0	31.0
¾"	¾"	24.0	26.0	19.0	60.0	36.0	62.0	38.0	11.0	64.0	118.0	17.0	15.0	44.0

Material specification

Nr	Component	Material
1	Body	Forged brass
2	Backnut	Forged brass
3	Anti-rotational washer	Polyethelene
4	Head	Brass bar
5	Spindle	Brass bar
6	Handle	Forged brass
7	Valve	Brass bar
8	Gland	Brass bar
9	Packing	Plastic
10	Seals	Rubber

Maximum pressure conditions

Size	Max Pressure (bar)	Min/Max Temperature (°C)	Test Pressure Shell (bar)	Test Pressure Seat (bar)	Max Pressure (psi)	Min/Max Temperature (°F)	Test Pressure Shell (psi)	Test Pressure Seat (psi)
½" to ¾"	10.0	4° + 90°C	15.0	11.0	145.0	39° + 194°F	217.5	159.5

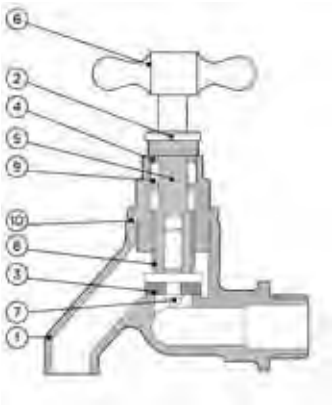

141HU Bibtap

specification

- crutch top
- BS1010
- hose union
- forged brass body

Connection	Code	Total (kg)
½"	508037	0.48
¾"	508038	0.71

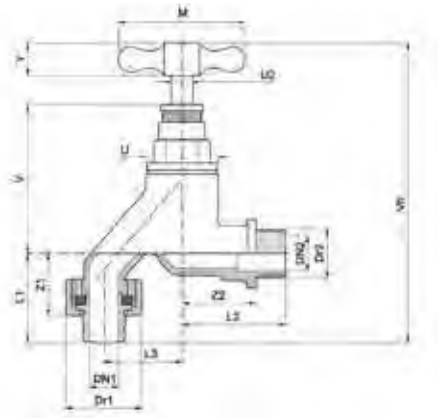

Dimensions (mm)

	DN1/DN2	Dr1	Dr2	L1	L2	L3	M	U	U2	V	Vh	Y	Z1	Z2
½"	DN15	30.0	21.0	70.0	44.0	21.0	54.0	30.0	10.0	63.0	165.0	15.0	36.0	31.0
¾"	DN20	30.0	26.0	76.0	60.0	36.0	62.0	40.0	11.0	64.0	175.0	17.0	34.0	44.0

Material specification

Nr	Component	Material
1	Body	Forged brass
2	Backnut	Forged brass
3	Anti-rotational washer	Polyethelene
4	Head	Brass bar
5	Spindle	Brass bar
6	Handle	Forged brass
7	Valve	Brass bar
8	Gland	Brass bar
9	Packing	Plastic
10	Seals	Rubber

Maximum pressure conditions

Size	Max Pressure (bar)	Min/Max Temperature (°C)	Test Pressure Shell (bar)	Test Pressure Seat (bar)	Max Pressure (psi)	Min/Max Temperature (°F)	Test Pressure Shell (psi)	Test Pressure Seat (psi)
½" to ¾"	10.0	4° + 90°C	15.0	11.0	145.0	39° + 194°F	217.5	159.5

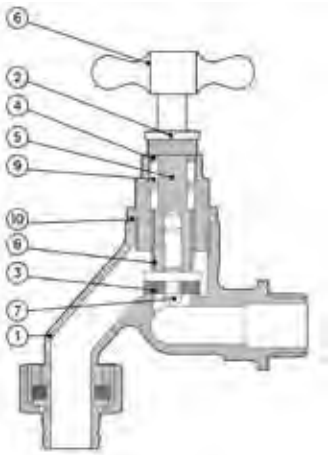

141HU FGK Bibtap with ferrule guard

specification

- BS1010
- hose union
- ferrule key supplied
- forged brass body

Connection	Code	Total (kg)
½"	508047	0.55
¾"	508048	0.82

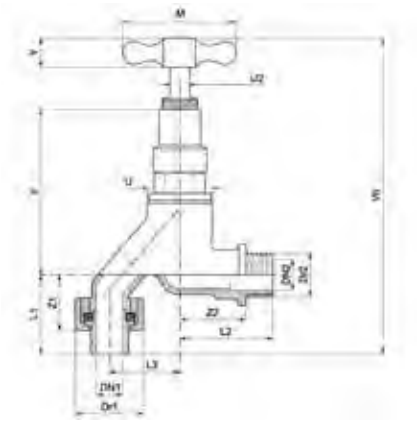

Dimensions (mm)

	DN1/DN2	Dr1	Dr2	L1	L2	L3	M	U	U2	V	Vh	Y	Z1	Z2
½"	DN15	30.0	21.0	70.0	44.0	36.0	62.0	30.0	11.0	82.0	188.0	17.0	36.0	31.0
¾"	DN20	30.0	26.0	78.0	60.0	36.0	62.0	38.0	11.0	88.0	201.0	17.0	36.0	44.0

Material specification

Nr	Component	Material
1	Body	Forged brass
2	Backnut	Forged brass
3	Anti-rotational washer	Polyethelene
4	Head	Brass bar
5	Spindle	Brass bar
6	Handle	Forged brass
7	Valve	Brass bar
8	Gland	Brass bar
9	Packing	Plastic
10	Seals	Rubber

Maximum pressure conditions

Size	Max Pressure (bar)	Min/Max Temperature (°C)	Test Pressure Shell (bar)	Test Pressure Seat (bar)	Max Pressure (psi)	Min/Max Temperature (°F)	Test Pressure Shell (psi)	Test Pressure Seat (psi)
½" to ¾"	10.0	4° + 90°C	15.0	11.0	145.0	39° + 194°F	217.5	159.5

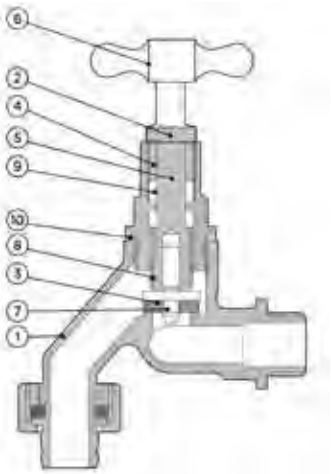

142HU Bibtap with integral double check valve

specification

- crutch top
- DZR metal
- DZR body

Connection	Code	Total (kg)
½"	508107	0.50

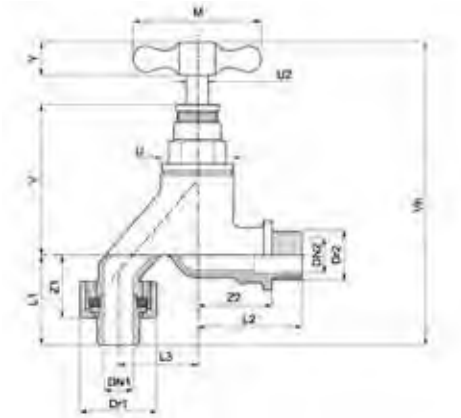

Dimensions (mm)

	DN1/DN2	Dr1	Dr2	L1	L2	L3	M	U	U2	V	Vh	Y	Z1	Z2
½"	DN15	30.0	21.0	70.0	44.0	21.0	54.0	30.0	10.0	63.0	165.0	15.0	36.0	31.0

Material specification

Nr	Component	Material
1	Body	DZR
2	Backnut	Forged brass
3	Anti-rotational washer	Polyethelene
4	Head	Brass bar
5	Spindle	Brass bar
6	Handle	Forged brass
7	Valve	Brass bar
8	Gland	Brass bar
9	Packing	Plastic
10	Seals	Rubber

Maximum pressure conditions

Size	Max Pressure (bar)	Min/Max Temperature (°C)	Test Pressure Shell (bar)	Test Pressure Seat (bar)	Max Pressure (psi)	Min/Max Temperature (°F)	Test Pressure Shell (psi)	Test Pressure Seat (psi)
½"	10.0	4° + 90°C	15.0	11.0	145.0	39° + 194°F	217.5	159.5

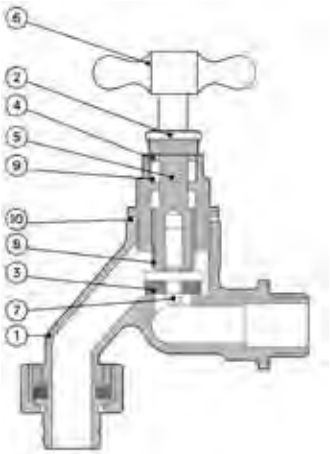

142HU FGK Bibtap with integral double check valve

specification

- DZR metal
- hose union
- ferrule key supplied
- DZR body

Connection	Code	Total (kg)
½"	508117	0.56

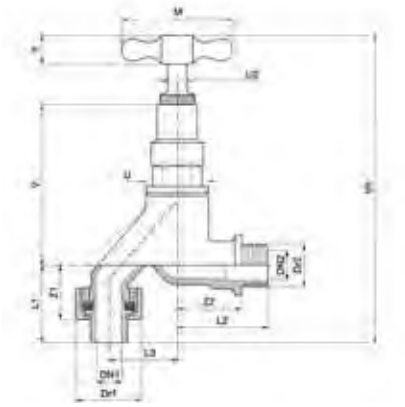

Dimensions (mm)

	DN1/DN2	Dr1	Dr2	L1	L2	L3	M	U	U2	V	Vh	Y	Z1	Z2
½"	DN15	30.0	21.0	70.0	44.0	36.0	62.0	30.0	11.0	82.0	188.0	17.0	36.0	31.0

Material specification

Nr	Component	Material
1	Body	DZR
2	Backnut	Forged brass
3	Anti-rotational washer	Polyethelene
4	Head	Brass bar
5	Spindle	Brass bar
6	Handle	Forged brass
7	Valve	Brass bar
8	Gland	Brass bar
9	Packing	Plastic
10	Seals	Rubber

Maximum pressure conditions

Size	Max Pressure (bar)	Min/Max Temperature (°C)	Test Pressure Shell (bar)	Test Pressure Seat (bar)	Max Pressure (psi)	Min/Max Temperature (°F)	Test Pressure Shell (psi)	Test Pressure Seat (psi)
½"	10.0	4° + 90°C	15.0	11.0	145.0	39° + 194°F	217.5	159.5

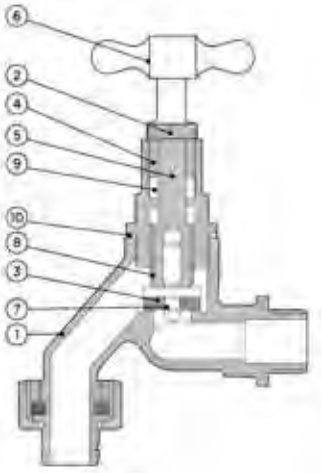

833 Draincock

specification

- type A to BS 2879/2
- male taper thread to BS 21
- brass body

Connection	Code	Total (kg)
½"	542007	0.12
¾"	542008	0.22

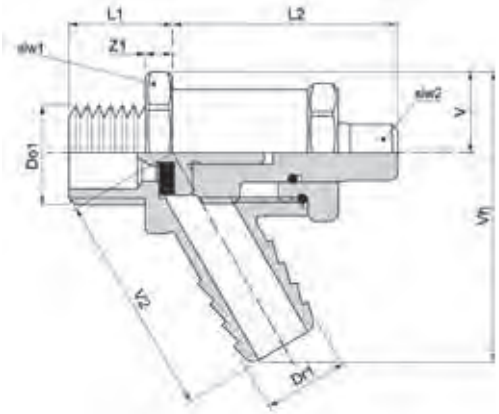

Dimensions (mm)

	Do1	Dr1	DN1/DN2	L1	L2	slw1	slw2	slw3	V	V2	Vh	Z1
½"	21.0	15.0	DN15	17.0	40.0	21.0	25.0	8.0	13.0	37.0	46.0	3.0
¾"	26.0	21.0	DN20	20.0	46.0	32.0	25.0	9.0	13.0	52.0	46.0	5.0

Material specification

Nr	Component	Material
1	Body	Brass
2	Headwork	Brass
3	Spindle	Brass
4	Washer	EPDM
5	Spindle "O" ring	EPDM
6	Cap "O" ring	EPDM
7	LS cover	Brass

Maximum pressure conditions

Size	Max Pressure (bar)	Min/Max Temperature (°C)	Test Pressure Shell (bar)	Test Pressure Seat (bar)	Max Pressure (psi)	Min/Max Temperature (°F)	Test Pressure Shell (psi)	Test Pressure Seat (psi)
½" to ¾"	20.0	4° + 120°C	30.0	22.0	232.1	39.2° + 248°F	435.1	319.1

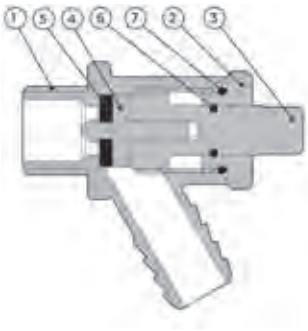

834 Draincock

water heating oil

specification

- type A to BS 2879/2
- type B to BS 2879/1
- male taper thread to BS 21
- brass body

Connection	Code	Total (kg)
½"	543007	0.07

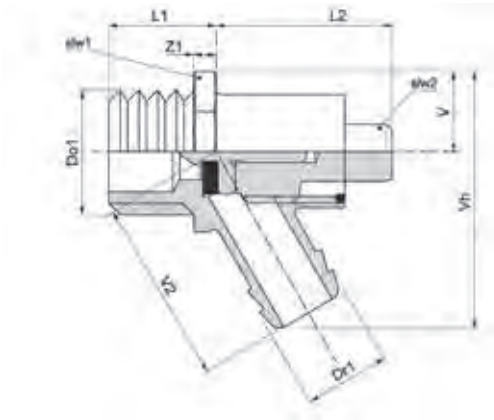

Dimensions (mm)

	Do1	Dr1	DN1/DN2	L1	L2	slw1	slw2	V	V2	Vh	Z1
½"	½"	13.0	DN15	16.0	21.0	23.0	8.0	12.0	33.0	42.0	4.0

Material specification

Nr	Component	Material
1	Body	Brass
2	Stem	Brass
3	Jumper washer	Rubber

Maximum pressure conditions

Size	Max Pressure (bar)	Min/Max Temperature (°C)	Test Pressure Shell (bar)	Test Pressure Seat (bar)	Max Pressure (psi)	Min/Max Temperature (°F)	Test Pressure Shell (psi)	Test Pressure Seat (psi)
½"	20.0	4° + 120°C	30.0	22.0	232.1	39.2° + 248°F	435.1	319.1

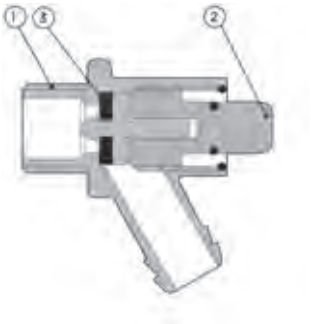

GM833 Draincock

specification

- bronze
- type A to BS 2879/2
- male taper thread to BS 21
- bronze (gunmetal) body

Connection	Code	Total (kg)
½"	542027	0.13
¾"	542028	0.26
1"	542029	0.60

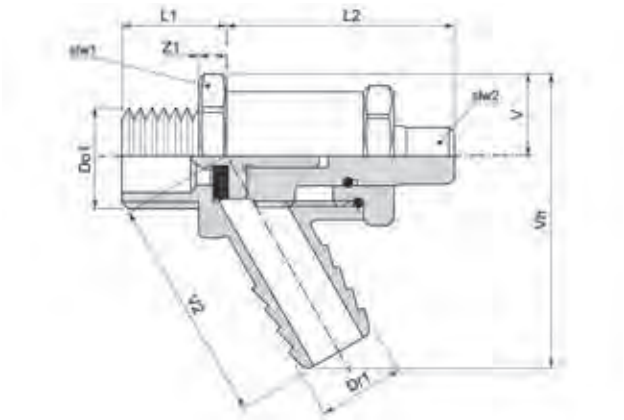

Dimensions (mm)

	Do1	Dr1	DN1/DN2	L1	L2	slw1	slw2	slw3	V	V2	Vh	Z1
½"	½"	14.0	DN15	19.0	37.0	25.0	19.0	8.0	13.0	45.0	52.0	4.0
¾"	¾"	21.0	DN20	22.0	48.0	34.0	26.0	9.0	17.0	52.0	65.0	6.0
1"	1"	27.0	DN25	27.0	68.0	39.0	39.0	13.0	20.0	64.0	79.0	9.0

Material specification

Nr	Component	Material
1	Body	Bronze (Gunmetal)
2	Headwork	Brass
3	Spindle	Brass
4	Washer	EPDM
5	Spindle "O" ring	EPDM
6	Cap "O" ring	EPDM
7	LS cover	Brass

Maximum pressure conditions

Size	Max Pressure (bar)	Min/Max Temperature (°C)	Test Pressure Shell (bar)	Test Pressure Seat (bar)	Max Pressure (psi)	Min/Max Temperature (°F)	Test Pressure Shell (psi)	Test Pressure Seat (psi)
½" to 1"	20.0	-10° + 120°C	30.0	22.0	290.1	-14° + 248°F	435.1	319.1

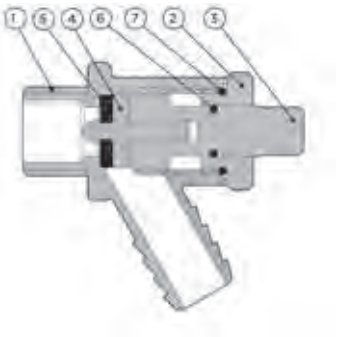

GM833LS Draincock

specification

- type A to BS 2879/2
- male taper thread to BS 21
- bronze (gunmetal) body

Connection	Code	Total (kg)
½"	542037	0.13
¾"	542038	0.26
1"	542039	0.60

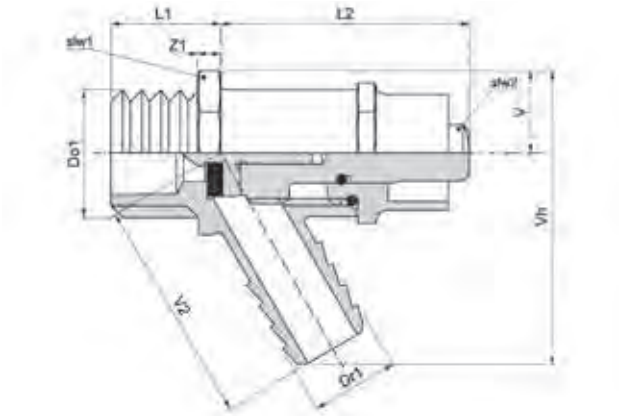

Dimensions (mm)

	Do1	Dr1	DN1/DN2	L1	L2	slw1	slw2	slw3	V	V2	Vh	Z1
½"	½"	14.0	DN15	19.0	39.0	25.0	19.0	8.0	13.0	45.0	59.0	5.0
¾"	¾"	20.0	DN20	22.0	47.0	34.0	25.0	8.0	17.0	50.0	59.0	6.0
1"	1"	27.0	DN25	28.0	68.0	40.0	38.0	12.0	20.0	64.0	59.0	9.0

Material specification

Nr	Component	Material
1	Body	Bronze (Gunmetal)
2	Headwork	Brass
3	Spindle	Brass
4	Washer	EPDM
5	Spindle "O" ring	EPDM
6	Cap "O" ring	EPDM
7	LS cover	Brass

Maximum pressure conditions

Size	Max Pressure (bar)	Min/Max Temperature (°C)	Test Pressure Shell (bar)	Test Pressure Seat (bar)	Max Pressure (psi)	Min/Max Temperature (°F)	Test Pressure Shell (psi)	Test Pressure Seat (psi)
½" to 1"	20.0	-10° + 120°C	30.0	22.0	290.1	-14° + 248°F	435.1	319.1

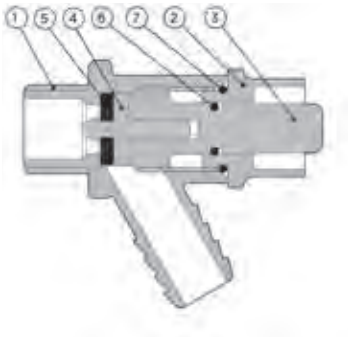

808 Service valve

specification

- copper x copper
- screw driver operation
- CP brass body

Connection	Code	Total (kg)
15mm	523007	0.11
22mm	523008	0.16

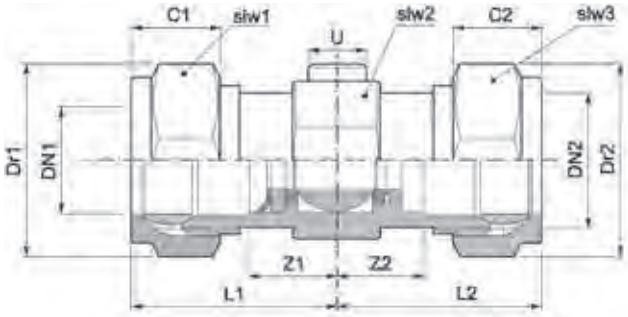

Dimensions (mm)

	C1/C2	Dr1/Dr2	DN1/DN2	L1	L2	slw1/slw3	slw2	U	Z1	Z2
15mm	13.0	26.0	DN15	31.0	32.0	26.0	22.0	6.0	14.0	15.0
22mm	13.0	32.0	DN22	30.0	35.0	32.0	23.0	13.0	13.0	18.0

Material specification

Nr	Component	Material
1	Body	CP brass
2	Ball	CP brass
3	Ball circlip	Stainless steel
4	Stem "O" ring	EPDM
5	Ball seals	PTFE
6	Compression nuts	CP brass
7	Compression olives	Brass

Maximum pressure conditions

Size	Max Pressure (bar)	Min/Max Temperature (°C)	Test Pressure Shell (bar)	Test Pressure Seat (bar)	Max Pressure (psi)	Min/Max Temperature (°F)	Test Pressure Shell (psi)	Test Pressure Seat (psi)
15 to 22mm	16.0	4° + 120°C	24.0	17.5	232.1	39.2° + 248°F	348.1	253.8

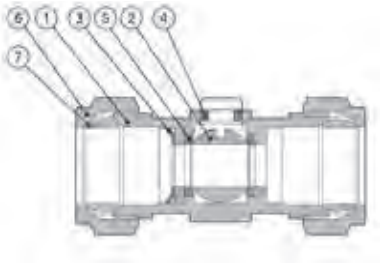

Pressure & temperature ratings

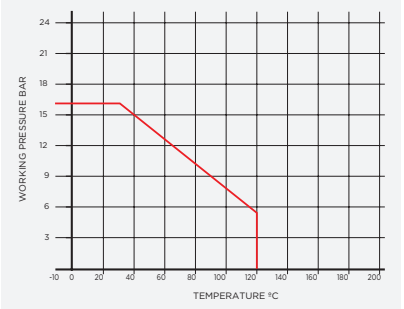

806 Service valve

specification

- copper x swivel union
- screw driver operated
- CP brass body

Connection	Code	Total (kg)
15mm x ½"	521007	0.11

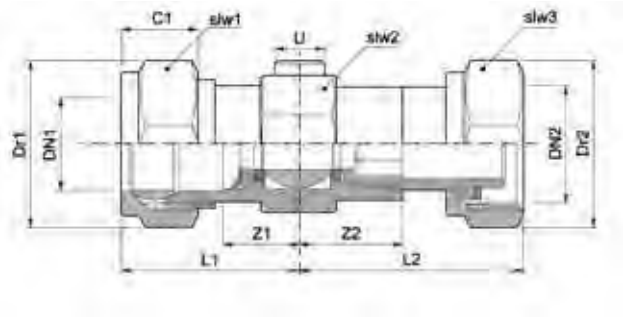

Dimensions (mm)

	C1	Dr1/Dr2	DN1/DN2	L1	L2	slw1/slw3	slw2	U	Z1	Z2
15mm	14.0	27.0	½"	31.0	37.0	25.0	22.0	8.0	11.0	17.0

Material specification

Nr	Component	Material
1	Body	CP brass
2	Ball	CP brass
3	Ball circlip	Stainless steel
4	Stem	CP brass
5	Stem 'O' ring	EPDM
6	Ball seals	PTFE
7	Compression nuts	CP brass
8	Spigot	CP brass
9	Swivel nut	CP brass
10	Washer	Red fibre (non-asbestos)

Maximum pressure conditions

Size	Max Pressure (bar)	Min/Max Temperature (°C)	Test Pressure Shell (bar)	Test Pressure Seat (bar)	Max Pressure (psi)	Min/Max Temperature (°F)	Test Pressure Shell (psi)	Test Pressure Seat (psi)
15mm	16.0	4° + 120°C	24.0	17.5	232.1	39.2° + 248°F	348.1	253.8

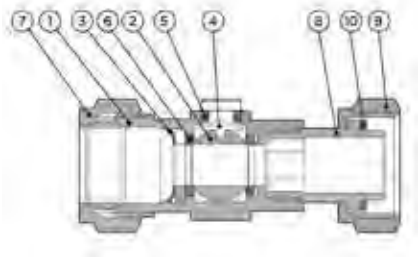

Pressure & temperature ratings

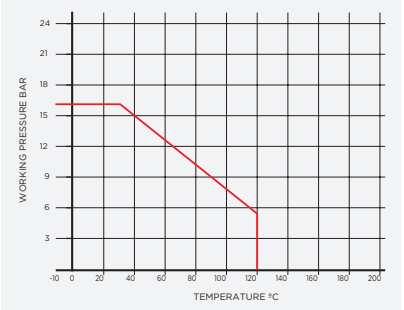

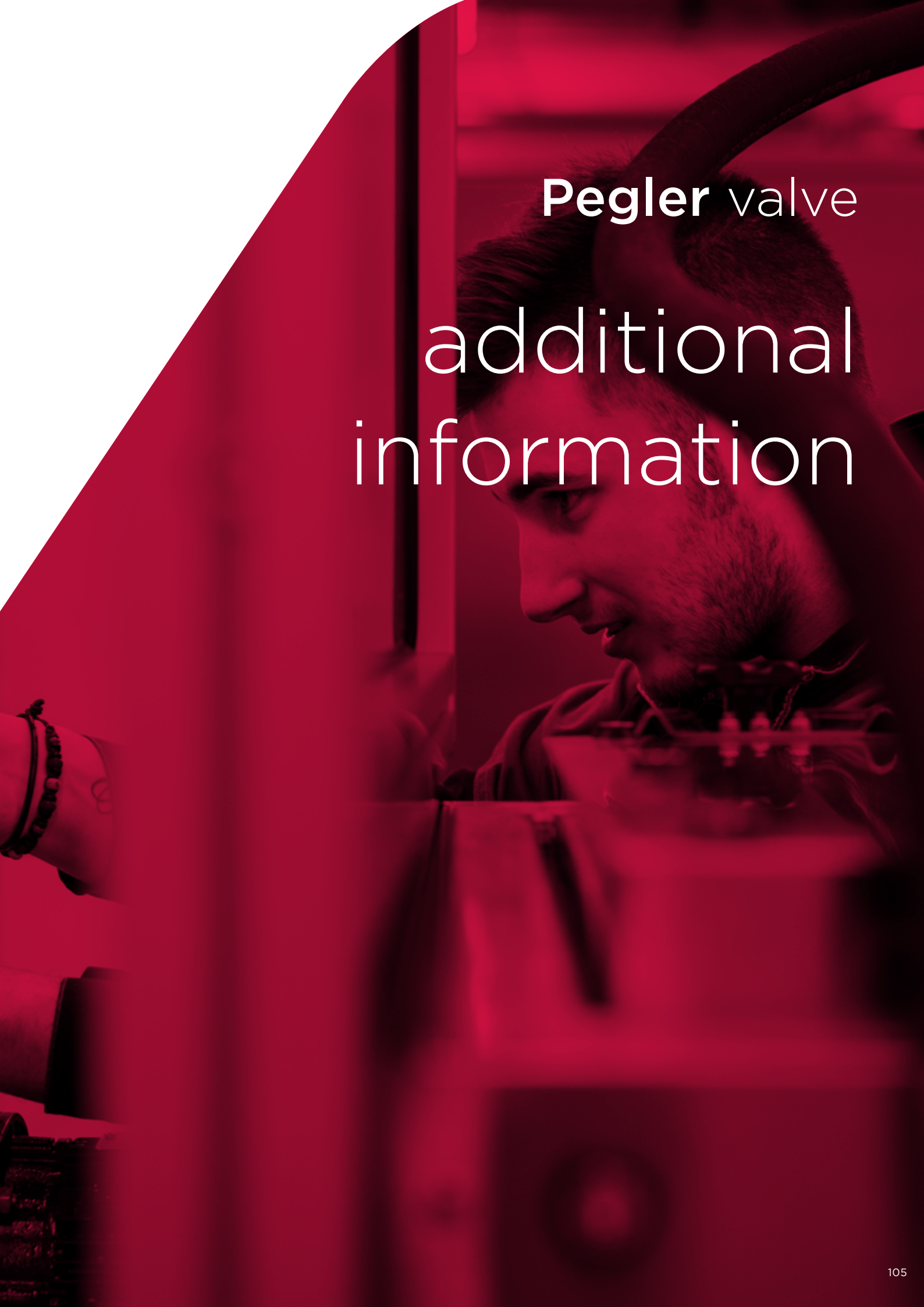

Pegler valve

additional information

Check valve - flow rates

1060A

Connection ISO 7 Rc taper thread	Code	Flow (l/s)	Kv (m³/h)	Cv (US GPM)
½"	122007	0.04 0.10 0.20 0.40	1.80 3.70 5.10 5.70	-
¾"	122008	0.04 0.10 0.40 1.00	2.70 5.60 13.60 15.30	-
1"	122009	0.01 0.20 0.30 1.0	7.70 13.90 18.40 25.30	-
1 ¼"	122010	0.20 0.30 0.40 1.0	15.00 20.60 25.30 32.60	-
1 ½"	122011	0.40 0.60 0.80 3.0	30.30 40.20 48.50 54.40	-
2"	122012	0.60 0.80 1.50 4.0	42.00 54.00 86.20 98.00	-
2 ½"	122013	1.50 3.00 4.00	97.60 135.30 156.00	-
3"	122014	2.00 3.00 5.00	144.60 168.40 229.00	-
4"	122015	-	-	-

American NPT taper thread (AT)	Code	Flow (l/s)	Kv (m³/h)	Cv (US GPM)
½"	122027	0.04 0.10 0.20 0.40	1.80 3.70 5.10 5.70	2.10 4.30 5.90 6.50
¾"	122028	0.04 0.10 0.40 1.00	2.70 5.50 13.60 15.30	3.10 6.30 15.60 17.60
1"	122029	0.01 0.20 0.30	7.70 13.90 18.40	8.80 16.00 21.10
1 ¼"	122030	0.20 0.30 0.40 1.0	15.00 20.60 25.30 32.60	17.20 23.70 29.10 37.50
2"	122032	0.60 0.80 1.50 4.00	42.00 54.00 86.20 98.00	48.30 62.00 99.00 112.60
2 ½"	122033	1.50 3.00 4.00	97.60 135.30 156.00	-
3"	122034	2.00 3.00 5.00	144.60 168.40 229.00	-

ISO 228 (BS 2779) parallel thread (PT)	Code	Flow (l/s)	Kv (m³/h)	Cv (US GPM)
½"	122047	0.04 0.10 0.20 0.40	1.80 3.70 5.10 5.70	-
¾"	122048	0.04 0.10 0.40 1.00	2.70 5.50 13.60 15.30	-
1"	122049	0.01 0.20 0.30 1.00	7.70 13.90 18.40 25.30	-
1 ¼"	122050	0.20 0.30 0.40 1.00	15.00 20.60 25.30 32.60	-
1 ½"	122051	0.40 0.60 0.80 3.00	30.30 40.20 48.50 54.40	-
2"	1220352	0.60 0.80 1.50 4.00	42.00 54.00 86.20 98.00	-
2 ½"	122053	1.50	97.60	-
3"	122054	2.00	144.60	
4"	122055	-	-	

1039

Connection EN 10226 taper thread	Code	Flow (l/s)	Kv (m³/h)	Cv (US GPM)
½"	119007	0.025 0.050 0.100 0.200	0.80 1.50 1.90 2.60	-
¾"	119008	0.075 0.100 0.150 0.200	2.40 2.90 3.40 3.50	-
1"	119009	0.050 0.100 0.200 0.400	1.90 3.60 6.30 8.50	-
1 ¼"	119010	0.060 0.080 0.200 0.600	2.20 2.90 6.80 13.90	-
1 ½"	119011	0.100 0.300 0.500 0.700	3.90 10.70 16.80 21.40	-
2"	119012	0.200 0.400 0.800 1.400	6.90 13.40 25.40 39.70	-

Connection EN 228 (BS 2779) parallel thread (PT)	Code	Flow (l/s)	Kv (m³/h)	Cv (US GPM)
½"	119047	0.025 0.050 0.100 0.200	0.80 1.50 1.90 2.60	-
¾"	119048	0.075 0.100 0.150 0.200	2.40 2.90 3.40 3.50	-
1"	119049	0.050 0.100 0.200 0.400	1.90 3.60 6.30 8.50	-
1 ¼"	119050	-	2.20 2.90 6.30 8.50	-
1 ½"	119051	-	-	-
2"	119052	-	-	-

1062

Connection ISO 7 Rc taper thread	Code	Flow (l/s)	Kv (m³/h)
½"	124007	0.04 0.10 0.20 0.40	1.80 3.70 5.10 5.70
¾"	124008	0.04 0.10 0.40 1.00	2.70 5050 13.60 15.30
1"	124009	0.01 0.02 0.30 1.00	7.70 13.90 18.40 25.30

Connection ISO 228 (BS 2779) parallel thread	Code	Flow (l/s)	Kv (m³/h)
½"	124013	0.04 0.10 0.20 0.40	1.80 3.70 5.10 5.70
¾"	124014	0.04 0.10 0.40 1.00	2.70 5.50 13.60 15.30
1"	124015	0.01 0.02 0.03 0.10	7.70 13.90 18.40 25.30

Check valve - flow rates

V909

Connection	Code	Flow (l/s)	Kv (m^3/h)
DN65	15398	1.50 2.50 6.00 10.00	57.00 81.00 126.00 139.00
DN80	15399	1.50 2.50 6.00 10.00	55.00 85.00 140.00 167.00
DN100	15400	2.50 8.00 15.00 25.00	101.00 200.00 234.00 259.00
DN125	15401	4.00 6.00 15.00 30.00	135.00 190.00 336.00 413.00
DN150	15402	6.00 10.00 20.00 40.00	216.00 338.00 556.00 747.00
DN200	15403	10.00 20.00 40.00 80.00	423.00 797.00 1340.00 1770.00
DN250	15404	16.00	2600.00
DN300	15405	220.00	4300.00

V914

Connection	Code	Flow (l/s)	Kv (m^3/h)
DN65	15378	1.50 5.00 8.00	63.00 150.00 161.00
DN80	15379	2.00 6.00 12.00 20.00	75.00 202.00 328.00 428.00
DN100	15380	4.00 10.00 15.00 20.00	168.00 353.00 447.00 516.00
DN125	15381	5.00 10.00 20.00 30.00	173.00 361.00 602.00 689.00
DN150	15382	7.00 20.00 40.00	298.00 735.00 1231.00
DN200	15383	15.00 40.00 90.00	520.00 1210.00 1835.00
DN250	15384	fully open	2725.00
DN300	15385	fully open	3850.00

Commissioning products - flow charts

FODRV ½" 1260LF / 1250LF - Low flow

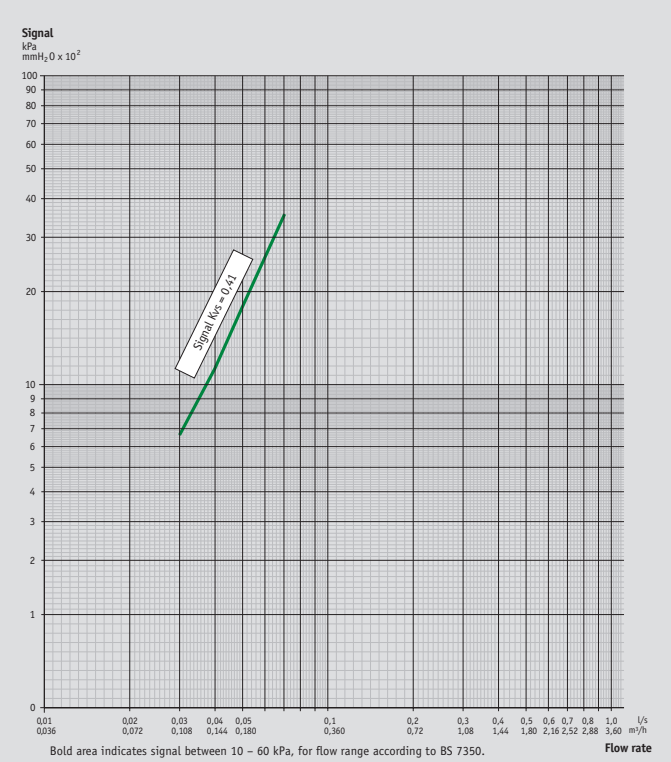

FODRV ½" 1260SF / 1250SF - Standard flow

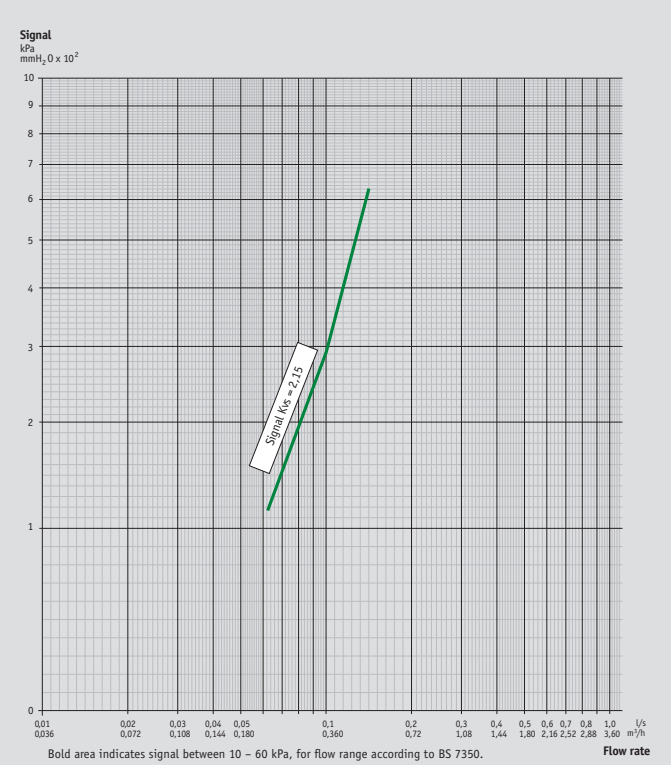

FODRV ¾" 1260SF / 1250SF - Standard flow

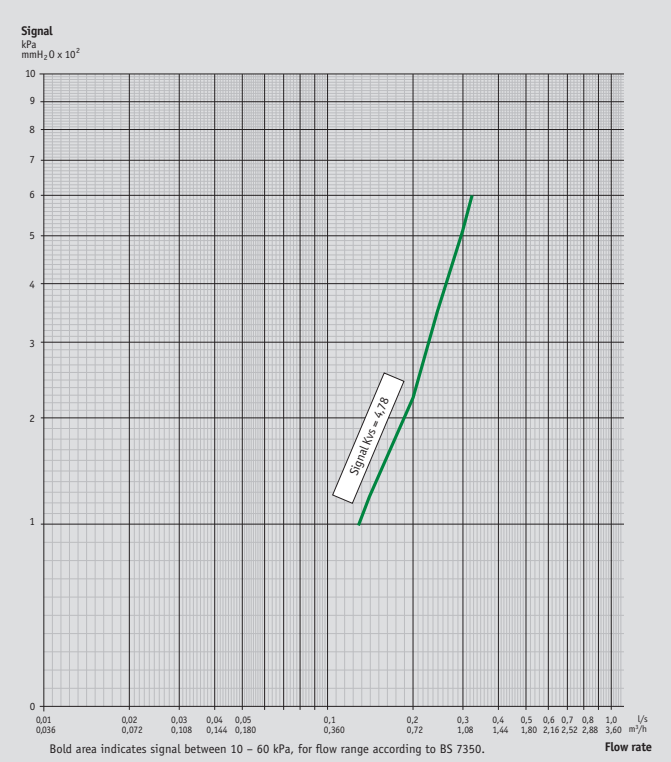

FODRV 1" 1260SF / 1250SF - Standard flow

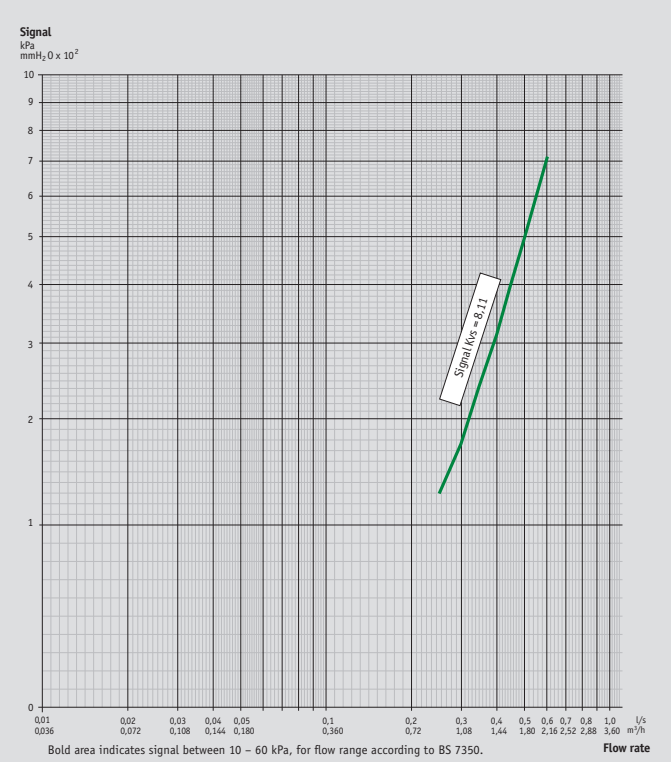

1260/1250ULF and 1260/1250M flowcharts available on request

Commissioning products - flow charts

FODRV 1 ¼″ 1260SF / 1250SF - Standard flow

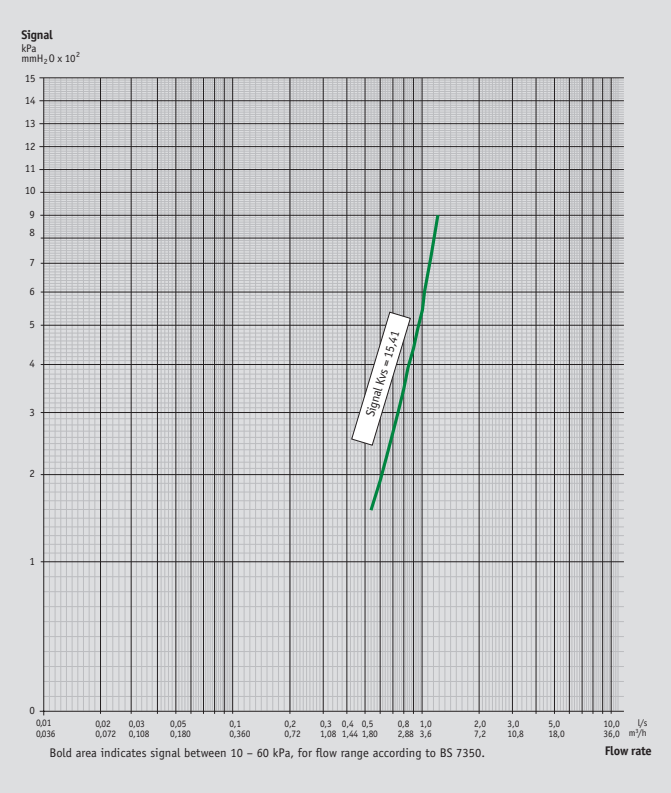

FODRV 1 ½″ 1260SF / 1250SF - Standard flow

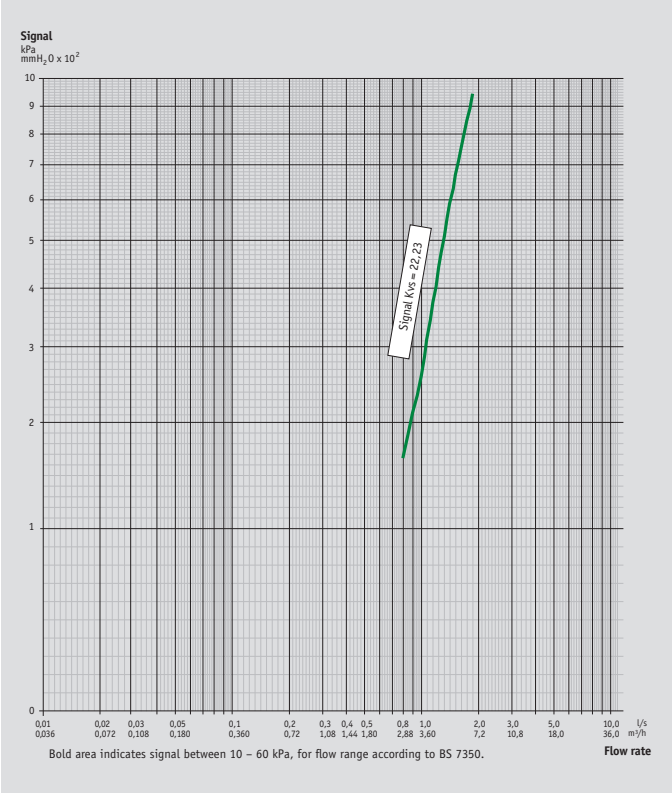

FODRV 2″ 1260SF / 1250SF - Standard flow

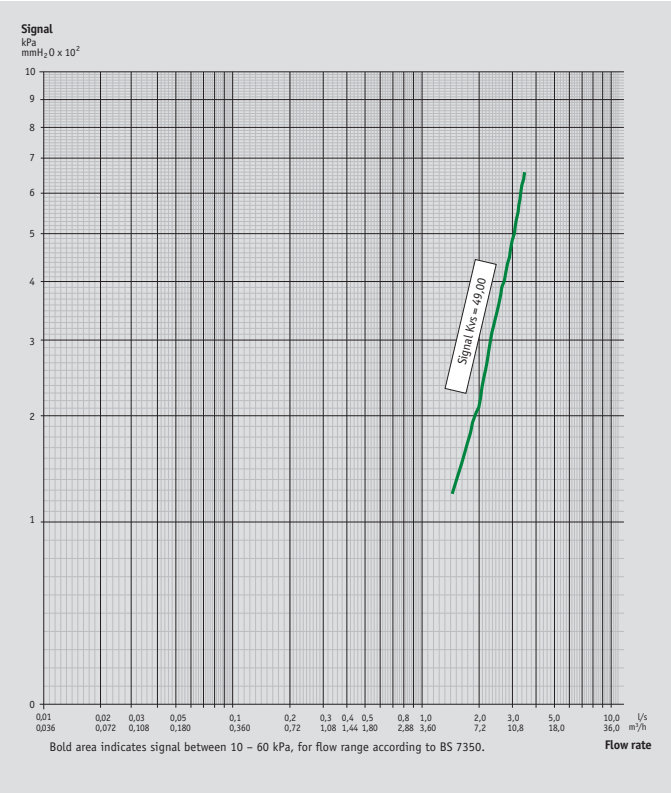

Commissioning products - flow charts

DRV ½″ 1200 - Standard flow

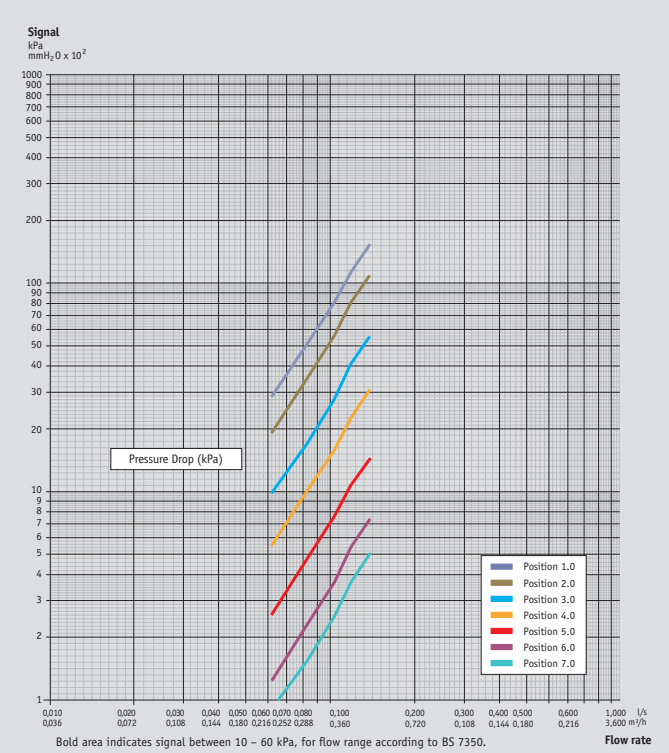

DRV ¾″ 1200 - Standard flow

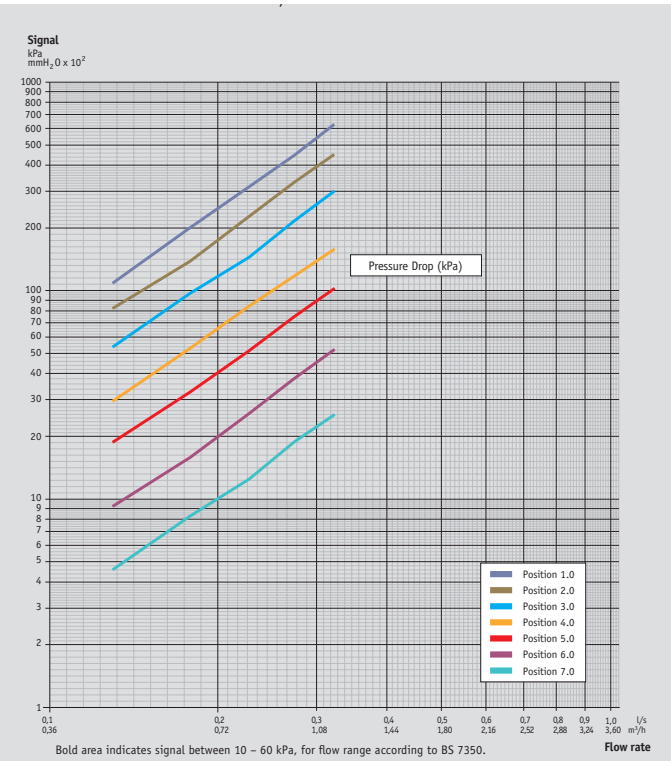

DRV 2″ 1200 - Standard flow

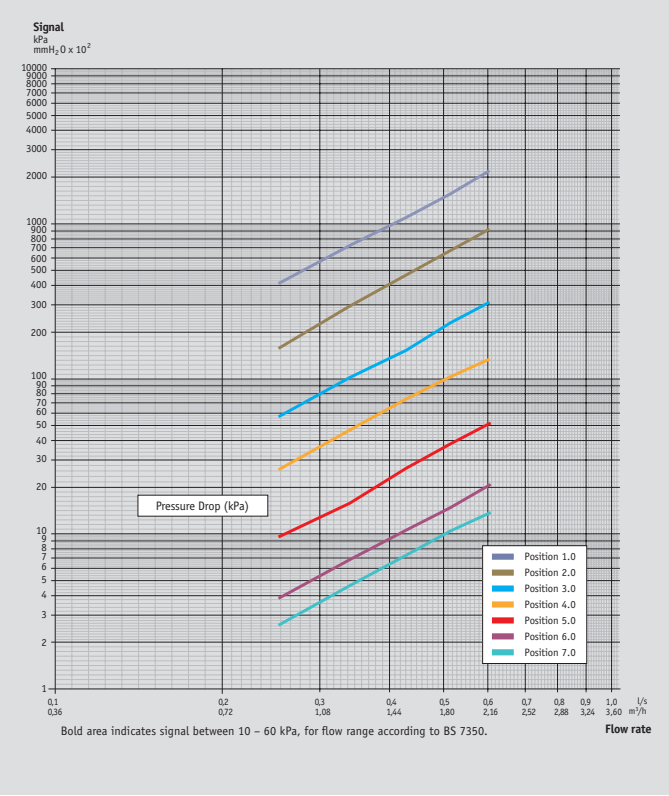

DRV 1 ¼″ 1200 - Standard flow

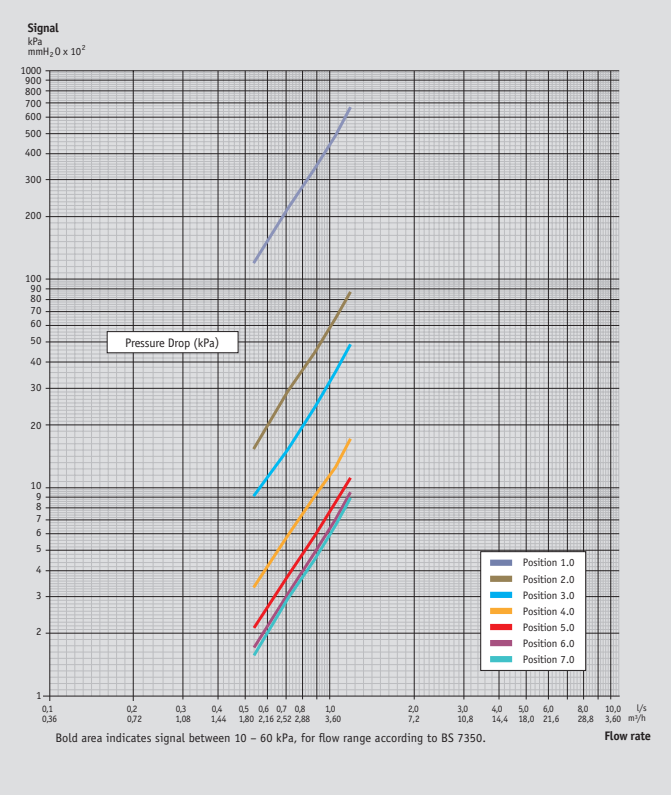

Commissioning products - flow charts

DRV 1 ½″ 1200 - Standard flow

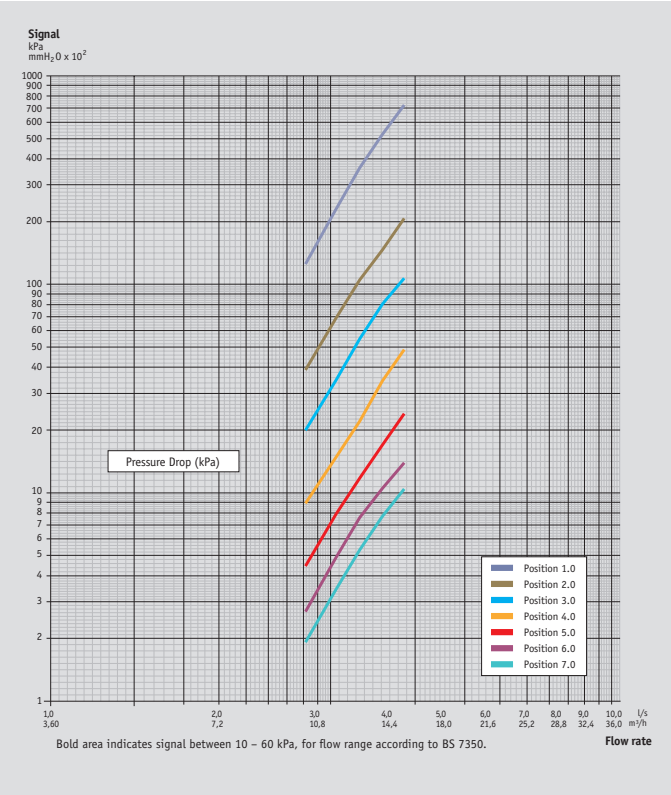

DRV 2″ 1200 - Standard flow

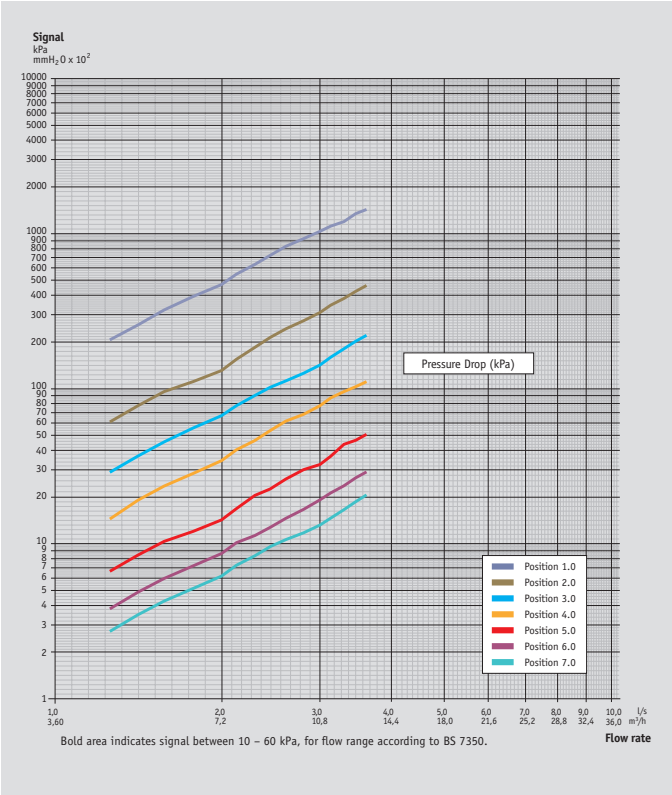

DN65 V952 - Variable orifice double regulating valve

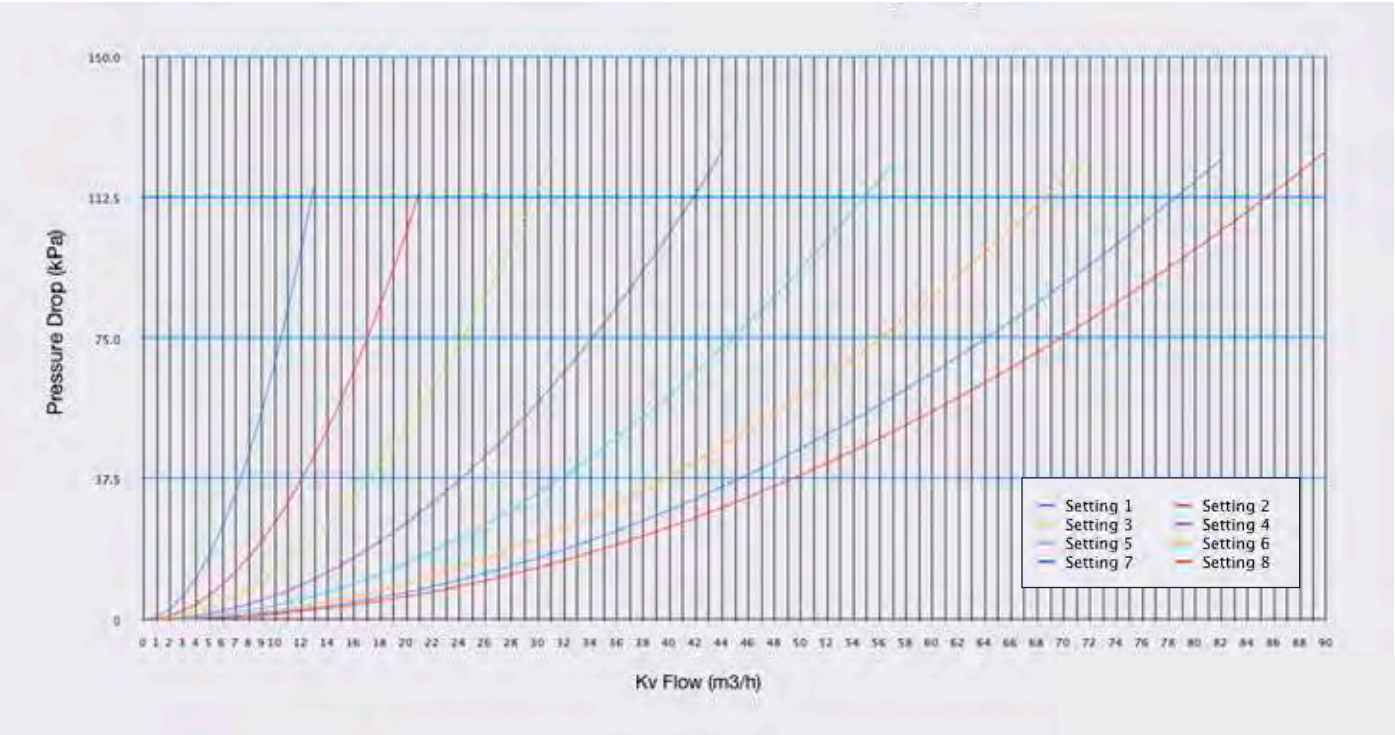

Commissioning products - flow charts

DN80 V952 - Variable orifice double regulating valve

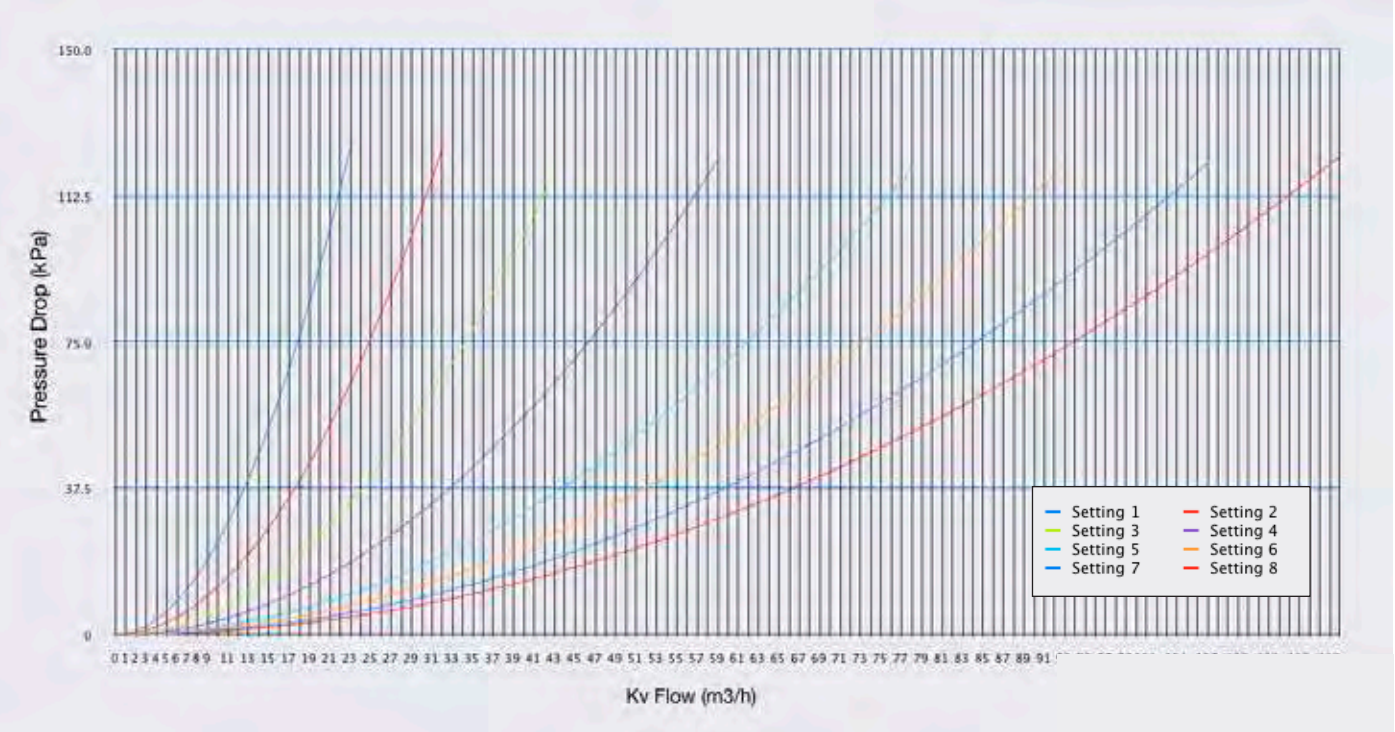

DN100 V952 - Variable orifice double regulating valve

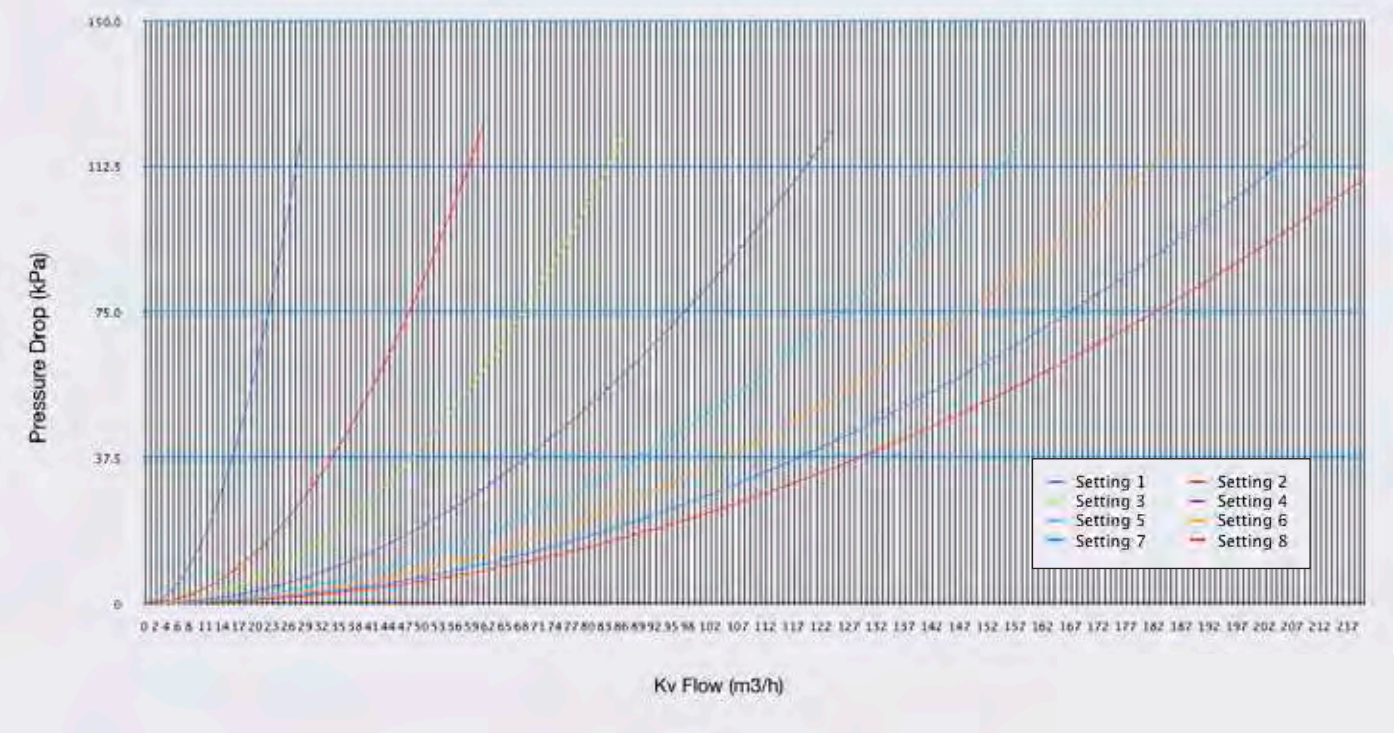

Commissioning products - flow charts

DN125 V952 - Variable orifice double regulating valve

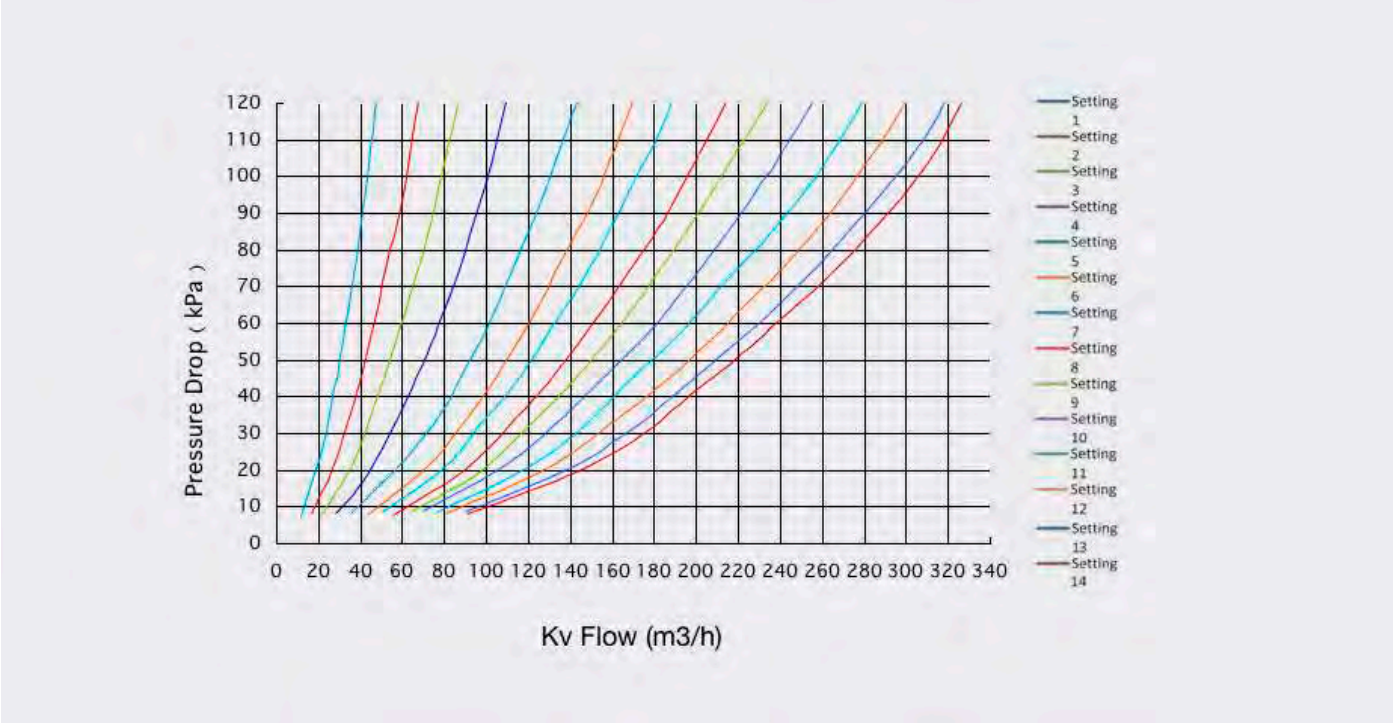

DN150 V952 - Variable orifice double regulating valve

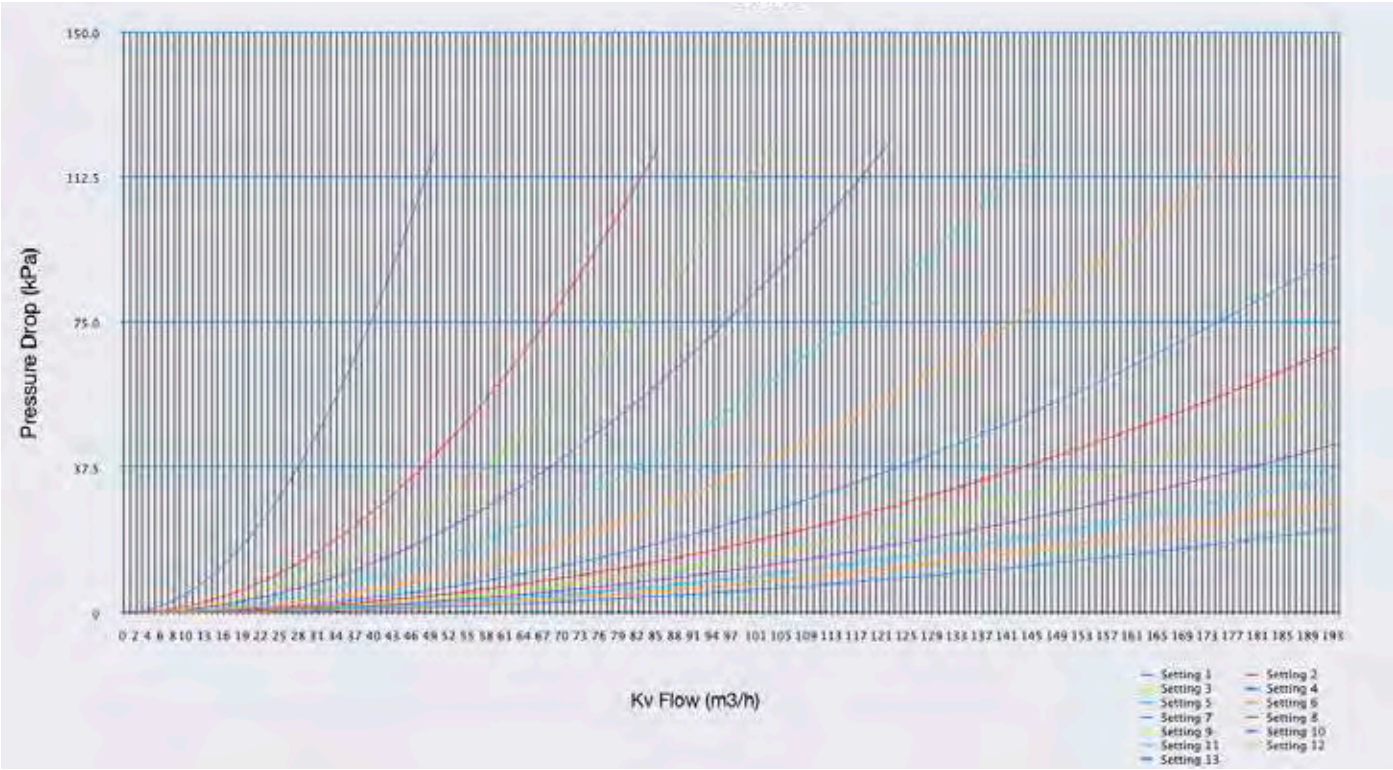

Commissioning products - flow charts

DN200 V952 - Variable orifice double regulating valve

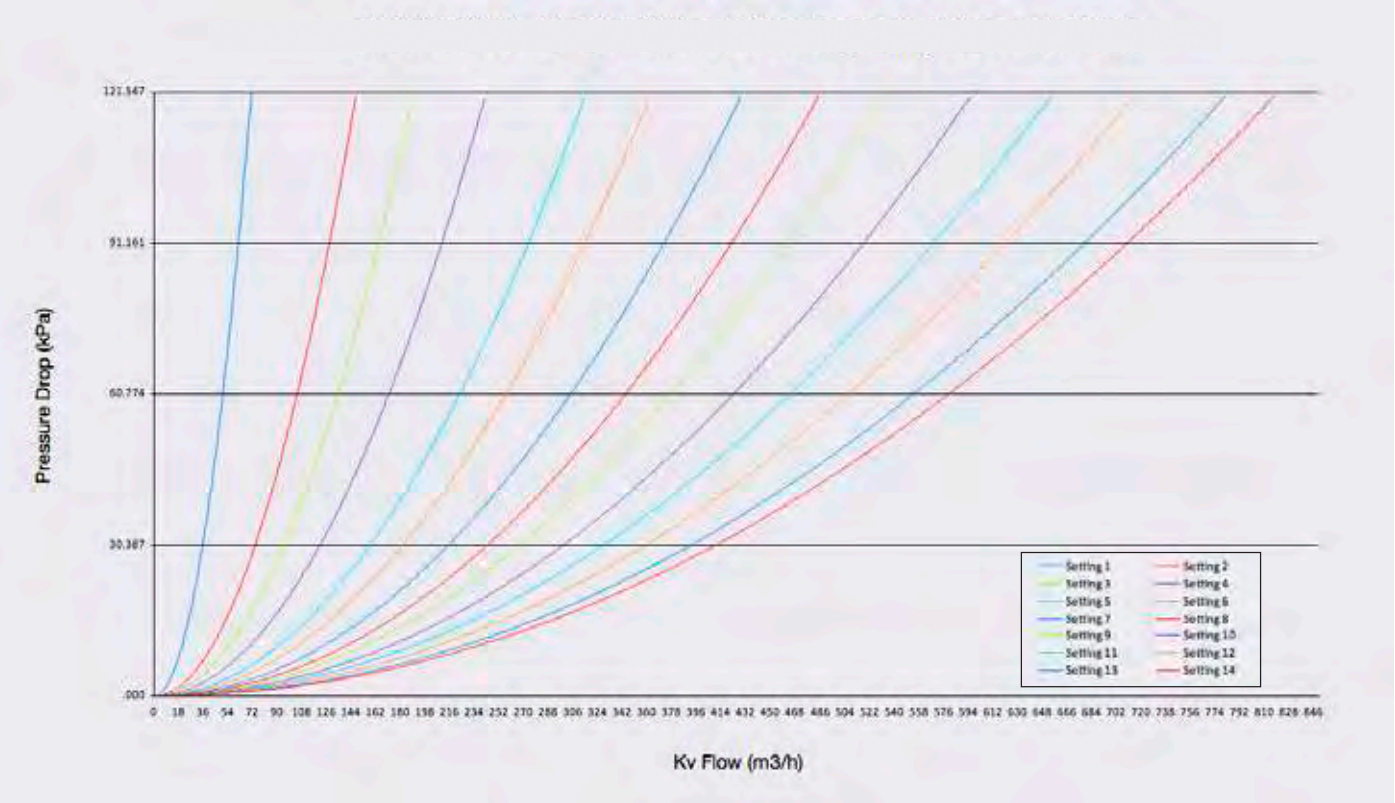

1600 - Pressure Independent Control Valve (PICV)

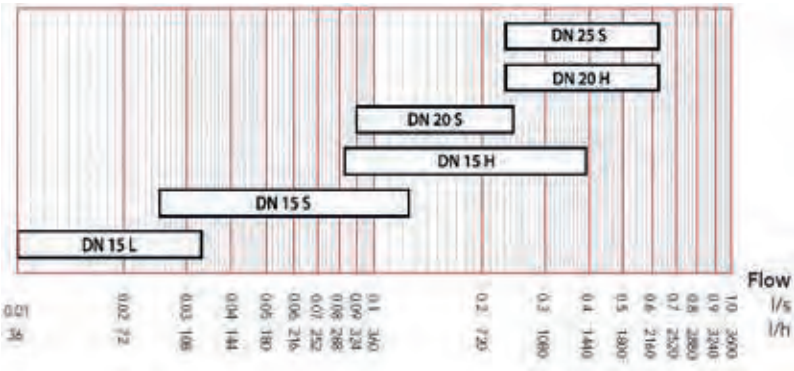

nominal size	flow (l/s)	flow (l/h)	colour code
DN15L	0.01 - 0.033	36 - 118	white
DN15S	0.025 - 0.125	90 - 450	red
DN15H	0.083 - 0.39	300 - 1400	black
DN20S	0.089 - 0.245	320 - 882	white
DN20H	0.232 - 0.617	835 - 2221	black
DN25S	0.232 - 0.617	835 - 2221	black

Float valves - flow rates and size selection

855 MOH - Float valve

Flow rates and size selection (gpm)

	Static pressure		855 Float valve					
Size	psi	feet	½"	¾"	1"	1 ¼"	1 ½"	2"
	0.50	1.15	0.25	0.82	1.85	2.50	5.90	11.70
	1.00	2.30	0.35	1.16	2.60	3.50	8.30	16.50
	2.00	4.60	0.50	1.65	3.70	4.90	11.80	23.50
	4.00	9.20	0.70	2.33	5.20	6.90	16.60	33.70
	7.00	16.10	0.93	3.10	6.90	9.20	21.90	43.10
LOW	10.00	23.10	1.10	3.70	8.20	11.00	26.30	52.50
PRESSURE	15.00	34.60	1.40	4.50	10.10	13.50	32.30	64.40
	20.00	46.20	1.60	5.20	11.70	15.60	37.30	74.40
	25.00	57.70	1.76	5.80	13.00	17.40	41.60	83.10
	30.00	69.30	1.93	6.40	14.30	19.10	45.60	91.00
	35.00	80.80	2.10	6.90	15.40	20.60	49.20	98.30
	40.00	92.40	2.20	7.40	16.50	22.00	52.60	105.00
	50.00	115.00	2.50	8.20	18.40	24.60	58.70	117.00
	60.00	138.00	2.70	9.00	20.20	27.00	64.40	128.00
	70.00	161.00	2.90	9.60	21.50	28.80	68.60	136.00
	80.00	184.00	3.10	10.30	23.30	31.00	74.00	147.00
	90.00	207.00	3.30	11.00	24.70	33.00	79.00	157.00
HIGH	100.00	231.00	3.50	11.60	26.00	34.70	84.00	165.00
PRESSURE	110.00	254.00	3.70	12.20	27.30	36.50	87.00	173.00
	125.00	289.00	3.90	13.00	29.20	39.00	93.00	186.00
	150.00	346.00	4.30	14.20	31.80	42.50	101.00	202.00
	175.00	404.00	4.60	15.30	34.40	46.00	109.00	218.00
	200.00	462.00	5.00	16.50	37.00	49.40	118.00	235.00

Range							Recommended float size	
	Size	Piston material	Backnut material	Seat bore	Tail length	Lever length	Copper	Plastic
	½"*	Nylon	Brass	⅛"	1 ¼"	10"	4 ½"x 5/16" W	4 ½"x 5/16" W
	½"	Brass	Brass	⅛"	1 ¼"	10"	4 ½"x 5/16" W	4 ½"x 5/16" W
HIGH	¾"	Brass	Brass	¼"	1 ½"	13"	5 ½"x 5/16" W	5"x 5/16" W
PRESSURE	1"	Brass	Brass	⅜"	1 ½"	14"	6"x ⅜" W	6"x ⅜" W
	1 ¼"	Brass	Brass	7/16"	2"	16"	8"x ⅜" W	8"x ⅜" W
	1 ½"	Brass	Brass	⅝"	2"	21 21/32"	10"x ½" W	10"x ½" W
	2"	Brass	Brass	⅝"	2"	21 21/32"	12"x ½" W	12"x ½" W

Flow Rate and Size Selection Chart General Notes:

The discharge through a float valve is governed by the running pressure maintained at its inlet. In practice this is difficult to measure and so the tables shown indicate the 'estimated' flow rate in G.P.M that will occur at various static heads for each size of float valve or for each size of seat in float valves that accept a variety of seat sizes. The flow rates quoted will only occur when the float valve is fully open and will reduce as the water level in the tank rises. Excessive pipe runs to the float valve will result in lower running pressures and thus reduced flow rates.

Note: Where the same flow rate is quoted for 2 sizes of float valve, select the smaller size if the indicated flow rate is more than 5% in excess of the flow rate required.

Maximum cold working pressure (bar)
14.0 bar at temperature up to 85°C

Maximum hot working pressure (bar)
Not suitable for maximum hot working pressure

856 MOH - Float valve

Flow rates and size selection (gpm)

	Static pressure		856 Float valve		
	psi	feet	⅜"	½"	¾"
	0.50	1.15	0.61	0.61	1.85
	1.00	2.30	0.86	0.86	2.60
	2.00	4.60	1.20	1.20	3.70
	4.00	9.20	1.70	1.70	5.20
	7.00	16.10	2.30	2.30	6.90
LOW	10.00	23.10	2.70	2.70	8.20
PRESSURE	15.00	34.60	3.30	3.30	10.10
	20.00	46.20	3.90	3.90	11.70
	25.00	57.70	4.30	4.30	13.00
	30.00	69.30	4.70	4.70	14.30
	35.00	80.80	5.10	5.10	15.40
	40.00	92.40	5.50	5.50	16.50

Range							Recommended float size	
	Size	Piston material	Backnut material	Seat bore	Tail length	Lever length	Copper	Plastic
	⅜"	Brass	Brass	7/32"	1 ¼"	7 ¼"		3"x 5/16" W
LOW	½"*	Nylon	Brass	7/32"	1 ¼"	10"	4 ½"x 5/16" W	4 ½"x 5/16" W
PRESSURE	¾"	Brass	Brass	⅜"	1 ½"	13"	5 ½"x 5/16" W	5"x 5/16" W
	½"	Brass	Brass	7/32"	1 ¼"	10"	4 ½"x 5/16" W	4 ½"x 5/16" W

Float valves - flow rates and size selection

857B/857N - Float valve

Flow rates and size selection (gpm)

	Static pressure		857 float valve		
	psi	feet	⅛″	¼″	⅜″
	0.50	1.15	0.20	0.82	1.84
	1.00	2.30	0.29	1.16	2.61
	2.00	4.60	0.41	1.65	3.69
	4.00	9.20	0.58	2.33	5.22
	7.00	16.10	0.77	3.08	6.90
LOW	10.00	23.10	0.92	3.69	8.27
PRESSURE	15.00	34.60	1.13	4.52	10.10
	20.00	46.20	1.31	5.22	11.70
	25.00	57.70	1.46	5.82	13.00
	30.00	69.30	1.60	6.40	14.30
	35.00	80.80	1.73	6.90	15.50
	40.00	92.40	1.85	7.38	16.50
	50.00	115.00	2.06	8.24	18.50
	60.00	138.00	2.26	9.02	20.20
MEDIUM	70.00	161.00	2.44	9.74	21.80
PRESSURE	80.00	184.00	2.60	10.40	23.30
	90.00	207.00	2.76	11.00	24.70
	100.00	231.00	2.92	11.60	26.10
	110.00	254.00	3.06	12.20	27.40
	125.00	289.00	3.26	13.10	29.20
HIGH	150.00	346.00	3.58	14.30	32.00
PRESSURE	175.00	404.00	3.86	15.40	34.60
	200.00	462.00	4.13	16.50	37.00

859B/859N - Float valve

Flow rates and size selection (gpm)

	Static pressure		859 float valve		
	psi	feet	⅛″	¼″	⅜″
	0.50	1.15	0.20	0.82	1.84
	1.00	2.30	0.29	1.16	2.61
	2.00	4.60	0.41	1.65	3.69
	4.00	9.20	0.58	2.33	5.22
	7.00	16.10	0.77	3.08	6.90
LOW	10.00	23.10	0.92	3.69	8.27
PRESSURE	15.00	34.60	1.13	4.52	10.10
	20.00	46.20	1.31	5.22	11.70
	25.00	57.70	1.46	5.82	13.00
	30.00	69.30	1.60	6.40	14.30
	35.00	80.80	1.73	6.90	15.50
	40.00	92.40	1.85	7.38	16.50
	50.00	115.00	2.06	8.24	18.50
	60.00	138.00	2.26	9.02	20.20
MEDIUM	70.00	161.00	2.44	9.74	21.80
PRESSURE	80.00	184.00	2.60	10.40	23.30
	90.00	207.00	2.76	11.00	24.70
	100.00	231.00	2.92	11.60	26.10
	110.00	254.00	3.06	12.20	27.40
	125.00	289.00	3.26	13.10	29.20
HIGH	150.00	346.00	3.58	14.30	32.00
PRESSURE	175.00	404.00	3.86	15.40	34.60
	200.00	462.00	4.13	16.50	37.00

Float valves - flow rates and size selection

901 - Float valve

Flow rates and size selection (gpm)

Static pressure		901 - Float valve size									
Bar	psi	½″	¾″	1″	1 ¼″	1 ½″	2″	2 ½″	3″	4″	6″
0.50	7.20	6.60	11.70	24.20	46.20	55.00	63.80	105.60	143.00	316.80	472.90
1.00	14.50	10.60	16.10	33.00	63.80	77.00	92.40	147.40	193.60	417.90	681.90
1.50	21.70	12.80	19.10	39.20	78.10	95.70	112.20	176.00	231.00	492.70	835.90
2.00	29.00	14.70	22.00	44.00	89.10	107.80	128.70	202.40	264.00	549.90	967.90
2.50	36.20	16.10	24.00	48.00	99.00	121.00	143.00	224.40	288.20	602.70	1077.80
3.00	43.50	17.40	26.20	51.50	107.80	132.00	158.40	242.00	312.40	644.50	1176.80
4.00	58.00	19.40	29.50	57.90	123.20	149.60	182.60	275.00	352.00	725.90	1341.80
5.00	72.00	21.30	32.30	63.40	136.40	169.40	204.60	303.60	384.90	791.90	1484.80
6.00	87.00	22.70	35.00	68.20	148.50	183.70	222.20	330.00	417.90	857.90	1605.80
7.00	101.00	24.20	37.20	72.80	158.40	200.20	237.60	349.80	483.90	921.70	1715.80
8.00	116.00	25.50	39.40	77.00	169.40	214.50	255.20	368.40	470.70	967.90	1825.70
9.00	130.00	26.80	41.10	81.40	178.20	227.70	269.50	384.90	494.90	1022.90	1913.70
10.00	145.00	27.90	42.90	85.80	187.00	261.80	281.60	400.30	516.90	1073.40	1979.70
11.00	159.00	29.00	44.90	89.70	NOT SUITABLE FOR PRESSURES ABOVE 10 BAR						
12.00	174.00	29.90	46.40	93.50							
13.00	188.00	30.80	48.00	97.40							
14.00	203.00	31.90	49.50	101.20							

Notes

Notes

PEGLER PY
Valve technology

Our fully integrated piping system incorporates a unique offering bringing together valves, fittings and pipes into one complete pipe-work system.
It combines the best world-class elements of modern connection and valve technology, incorporating press, push, groove, compression, capillary and threaded solutions for copper, steel, multi-layer and plastic pipes, with an emphasis on delivering heat free jointing.

head office

Aalberts Integrated Piping Systems Ltd
St. Catherine's avenue / Doncaster
South Yorkshire / DN4 8DF / England
tel: +44 (0) 1302 560 560
fax: +44 (0) 1302 560 203
email: info@pegler.co.uk
www.pegler.co.uk

All brand names and logo styles are registered trademarks. Maintaining a policy of continual product development, we reserve the right to change specifications, design and materials of products listed in this publication without prior notice.
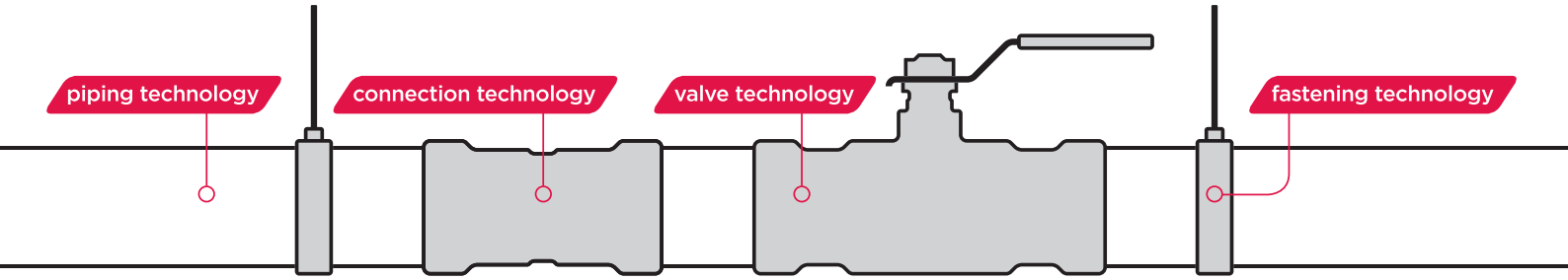
Lit. Ref: 880185